STANDARD DRAWINGS

For

UTILITY EASEMENTS
WATER
SEWER
ROADS
DRAINAGE

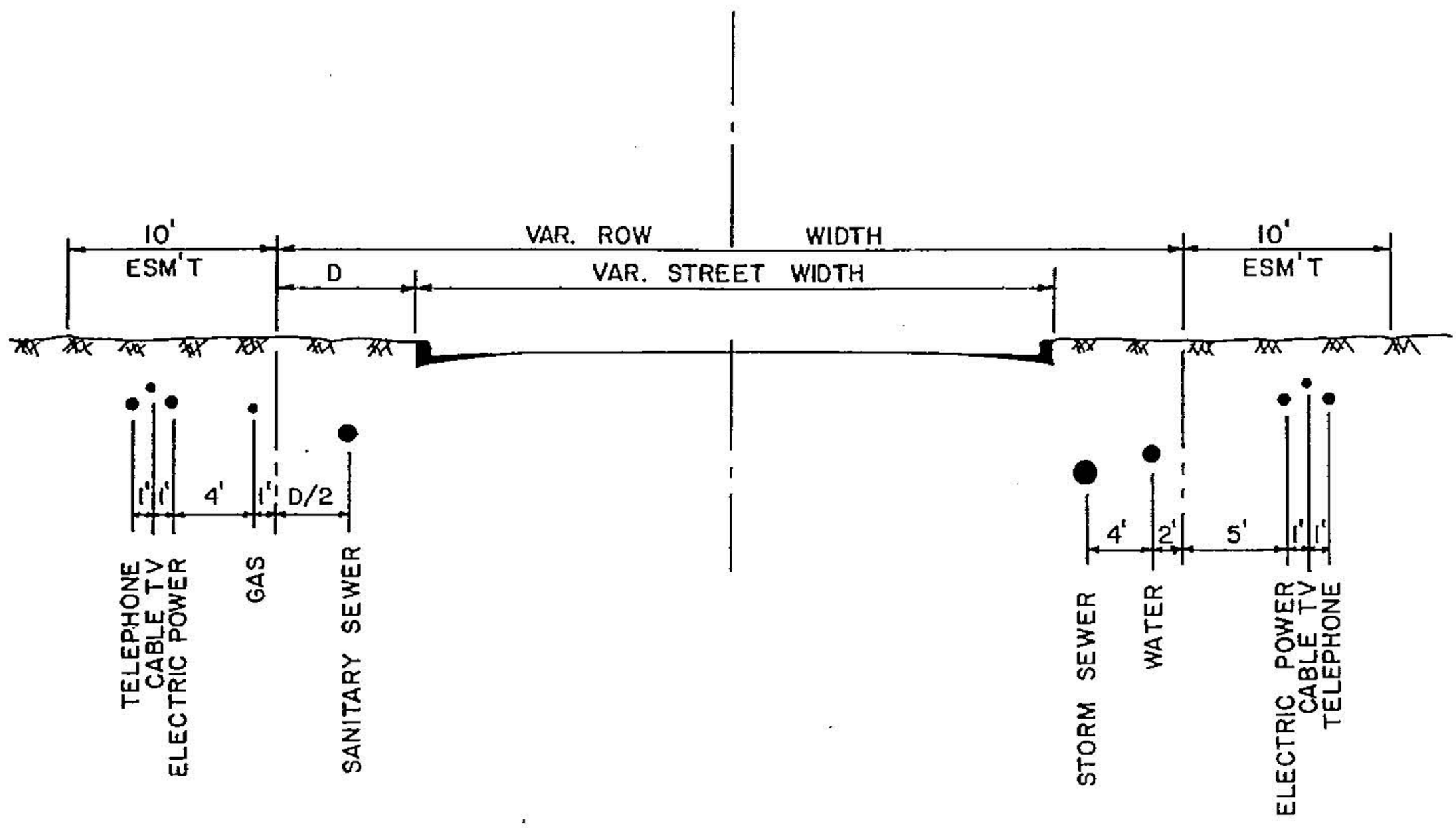

Huntsville Design Criteria	UTILITY PLACEMENT IN R.O.W with ADJACENT EASEMENTS	Scale: NONE
Revisions		FIGURE 7-1

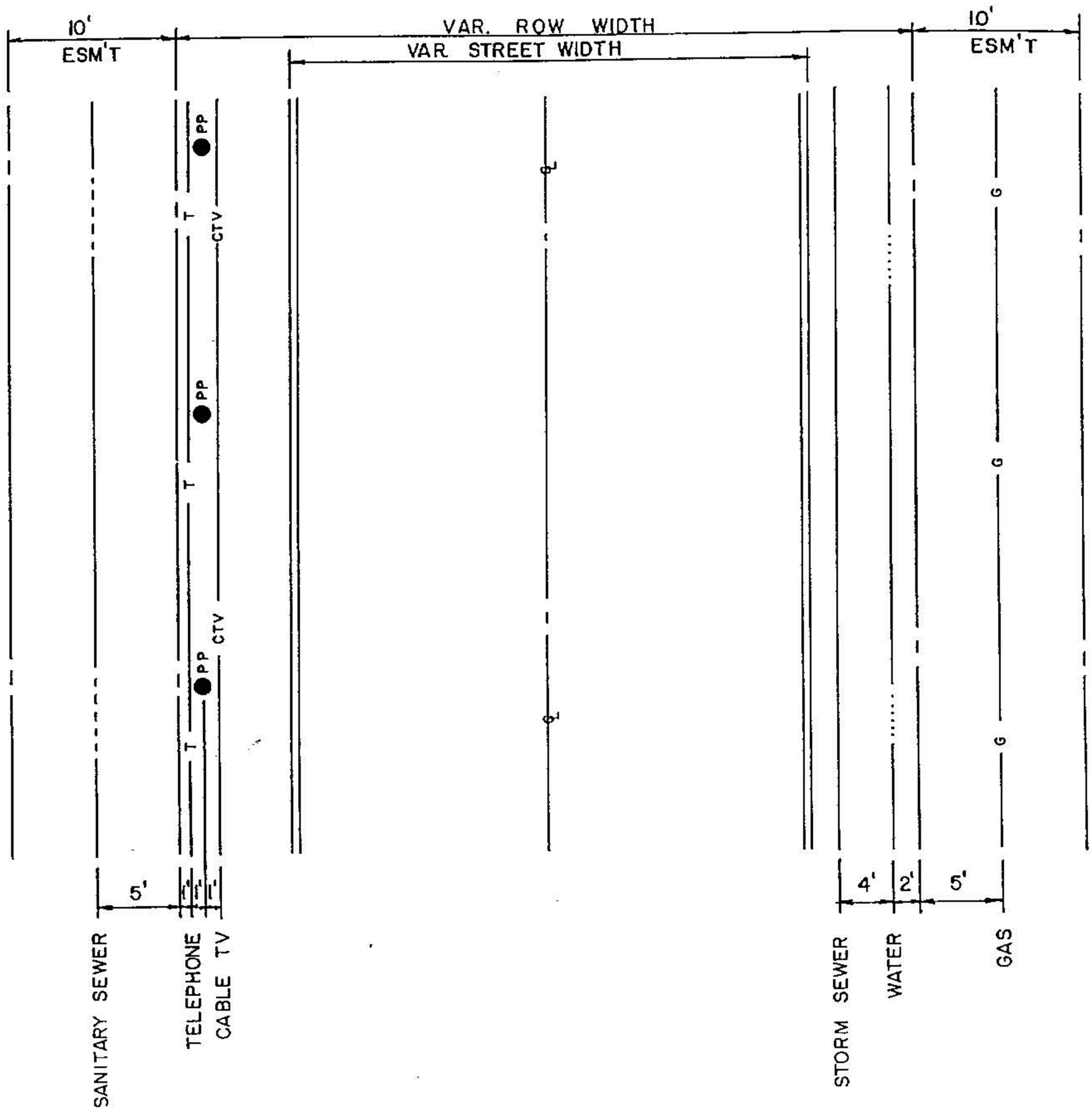

Huntsville Design Criteria	UTILITY PLACEMENT IN R.O.W. with ADJACENT EASEMENTS (OVERHEAD)	Scale: NONE
Revisions		FIGURE 7-2

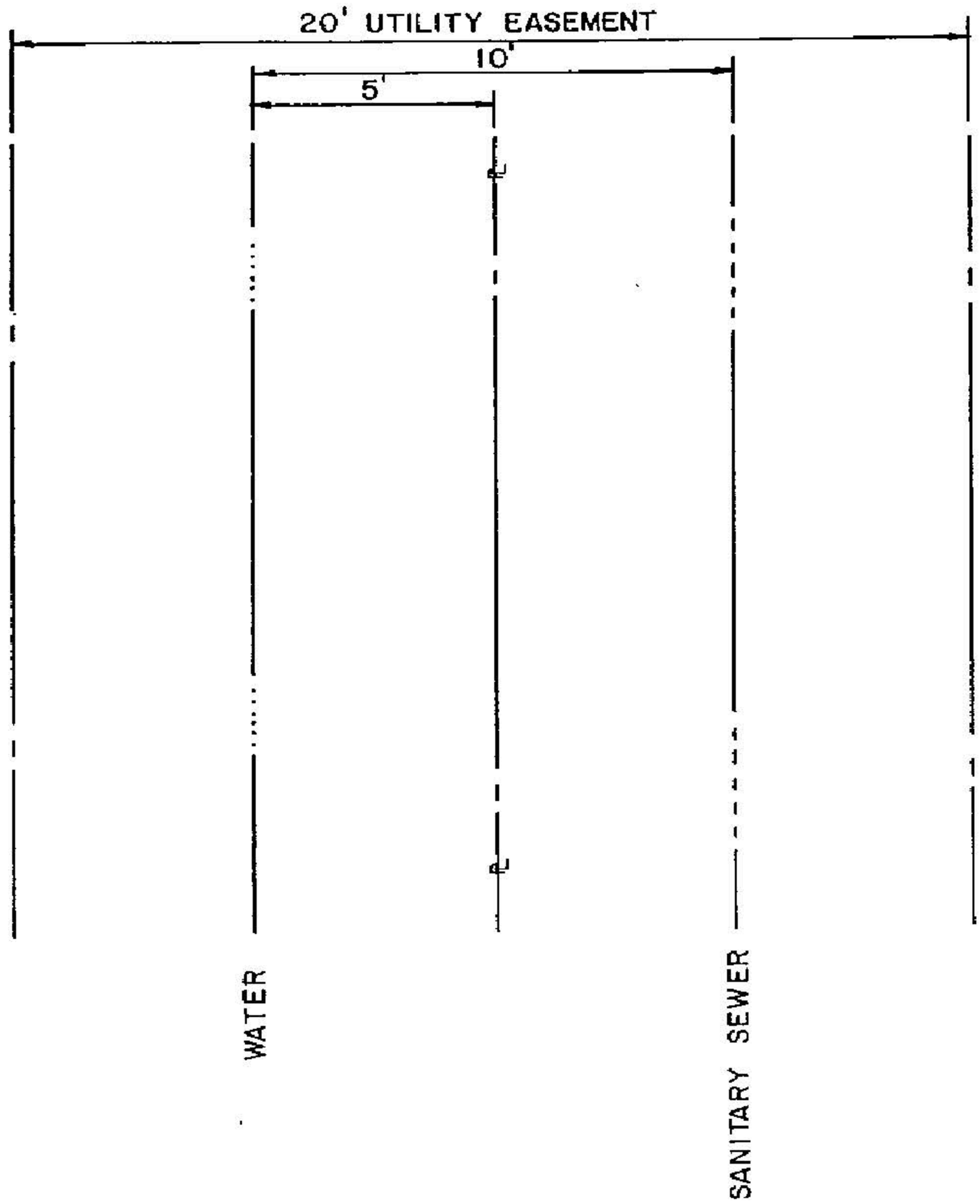

Huntsville Design Criteria	UTILITY PLACEMENT IN BACKLOT EASEMENT	Scale: NONE
Revisions		FIGURE 7-3

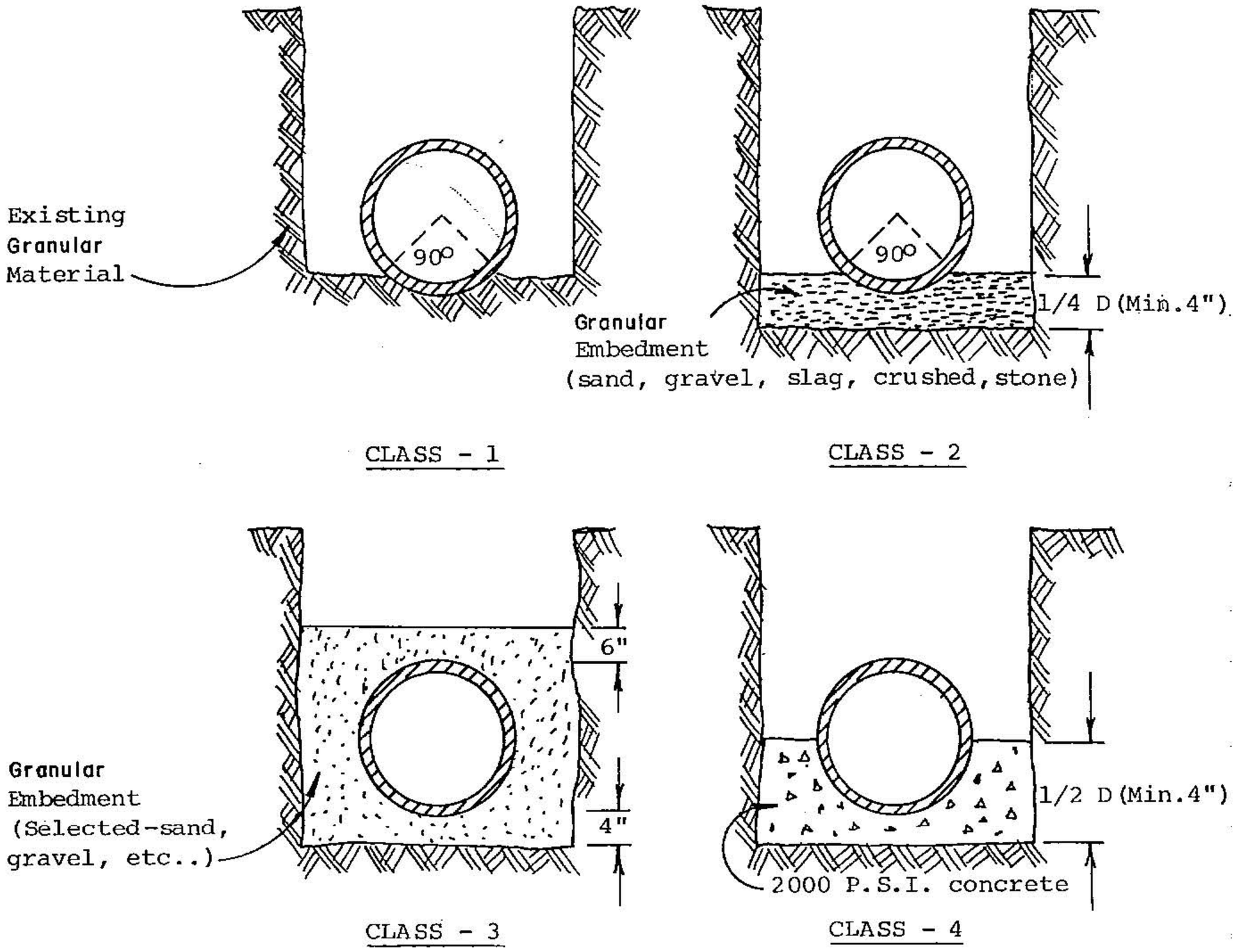

NOTE:

1. Class of bedding required shall be based on type of soil encountered in excavation.
2. Minimum trench width shall be pipe outside diameter (O.D.) + 12 inches.
3. Backfill above the bedding shall conform to "Typical Utility Trench Repair" Standard Drawing W-2.
4. Refer to Standard Specification Items 101 and 201 for material and construction requirements.
5. All trenches within 3' of existing curb must be backfilled with 2 sack per cubic yard cement stabilized sand.

Huntsville Design Criteria	TYPICAL PIPE BEDDING	Scale: NONE
Revisions		FIGURE W-1

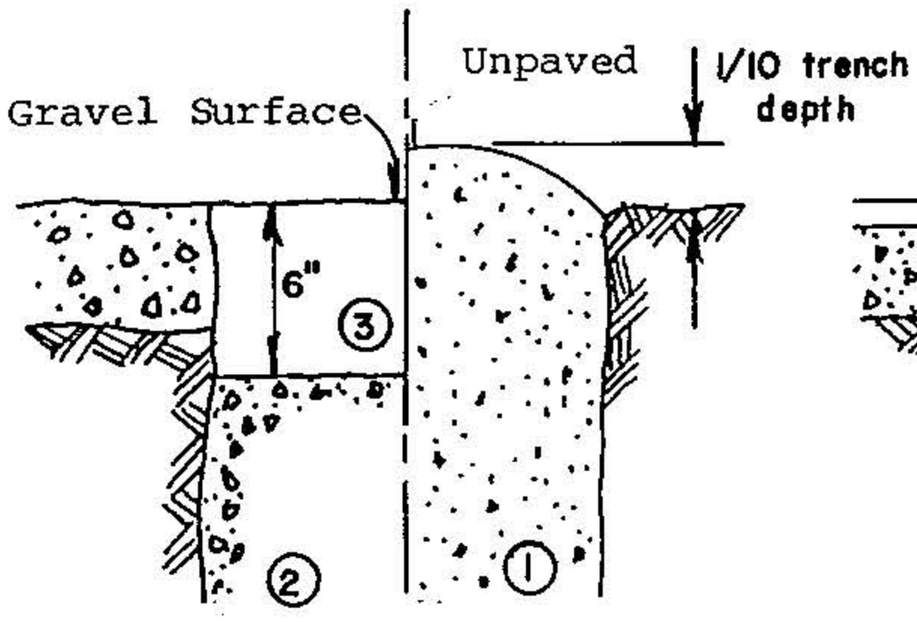

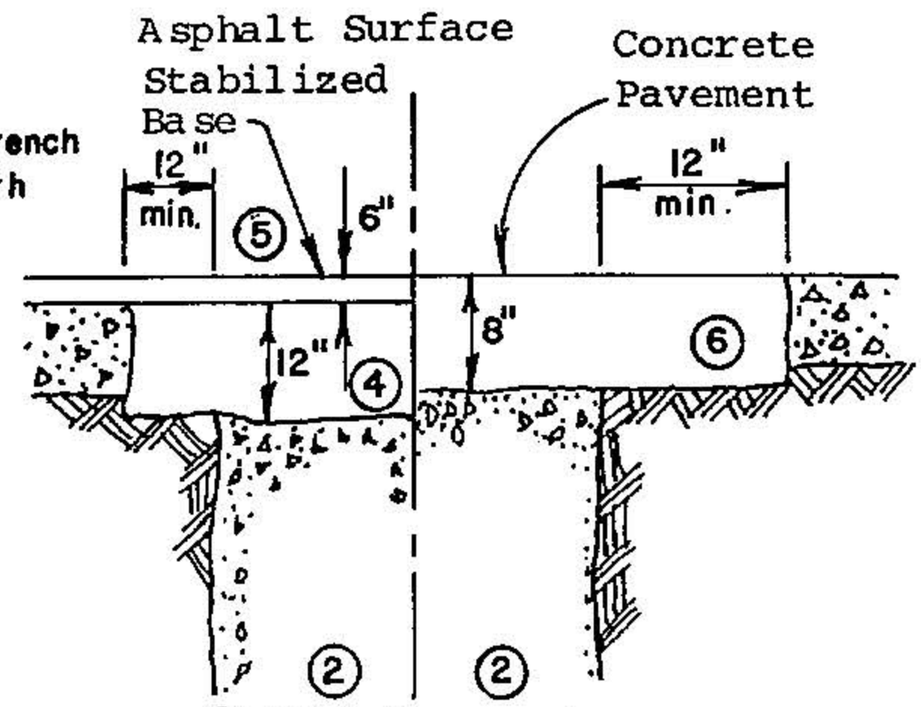

* (1) Select material
* (2) 2-Sack cement stabilized sand
** (3) Crushed rock, ironore base material
** (4) 2-Sack cement-stabilized sand

(5) HMAC Pavement
(6) Class "A" concrete pavement, reinforced to match existing pavement.

* Compaction by tamping, vibration or jetting as appropriate.
** Tamped pneumatically or mechanically to 95% modified proctor density.

NOTES:

1. All Materials and Construction shall conform to City Standard Specifications.
2. Stabilized sand backfill requirements to extend 3 feet behind any curb and gutter or other concrete structure and to ditch flowline on non-curb and gutter streets.
3. Where 50% or more of the surface area of pavement has been removed or damaged, calculated at intervals of one block or 350 LF (which ever is less), full width restoration shall be required. Any strip of remaining pavement less than two feet in width along curb and gutter or pavement edge, shall be removed and replaced.
4. Utility crossings of City streets must be bored, unless permission for a street cut has been given in writing by the City Engineer. Street cuts parallel to centerline must be approved by the City Engineer and will require resurfacing by a paving machine.
5. Street surfacing shall be trimmed to neat straight line with the edges free of dust, moisture or loose material.
6. All cold joint surfaces shall be tacked with emulsion which shall have "broken" prior to patching.
7. Completed patch shall not deviate from existing surface more than .03 ft./10 ft. in profile or .05ft./10 ft. in cross-section when measured with a 10 ft. straight edge.
8. Complete patch shall not pond water in excess of .01 foot.
9. Contractor shall be responsible for maintenance of street repair for one year after installation.
10. All trenches 4' deep or deeper must be shored.

Huntsville Design Criteria	TYPICAL UTILITY TRENCH REPAIR	Scale: NONE
Revisions		FIGURE W - 2

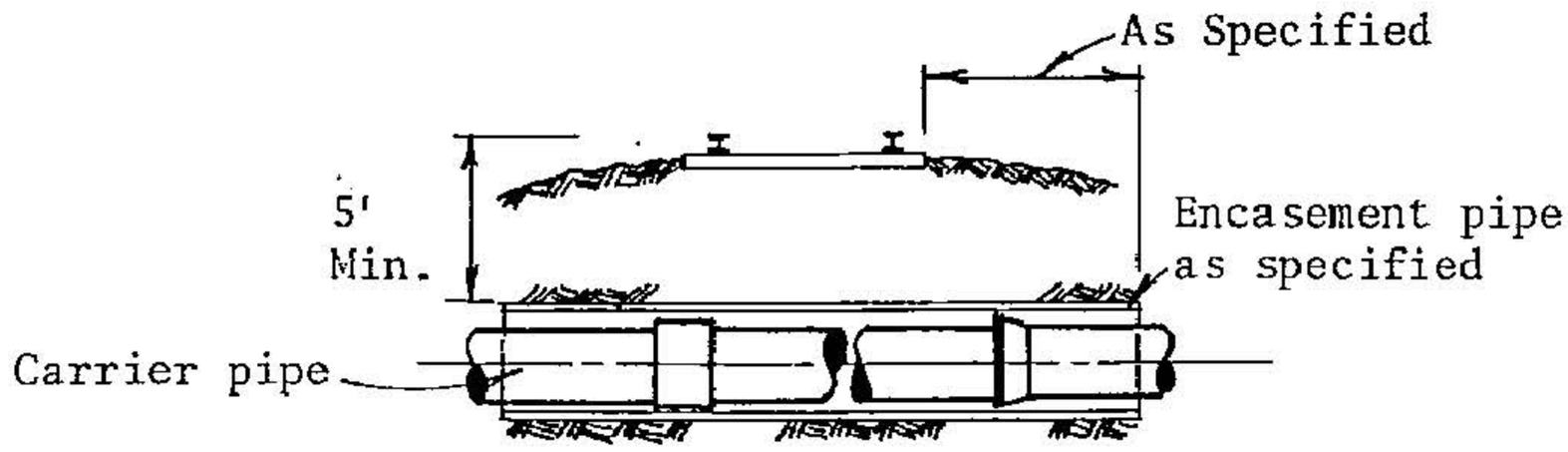

Carrier Size	Minimum Encasement		
	Corrugated Metal Pipe	Concrete Pipe	Steel Pipe
4" C.I.	15" - 14 GA	12" Class V	10" - .25 Wall
6" "	" - " "	15" " "	14" - " "
8" "	18" - " "	15" " "	16" - " "
10" "	21" - " "	18" " "	18" - " "
12" "	24" - " "	21" " "	20" - " "
14" "	30" - " "	24" " "	24" - " "
16" "	30" - " "	27" " "	26" - " "
18" "	30" - " "	30" " "	30" - " "
20" "	36" - " "	33" " "	36" - .375 "
24" "	36" - " "	36" " "	42" - " "

SINGLE TRACK CROSSING

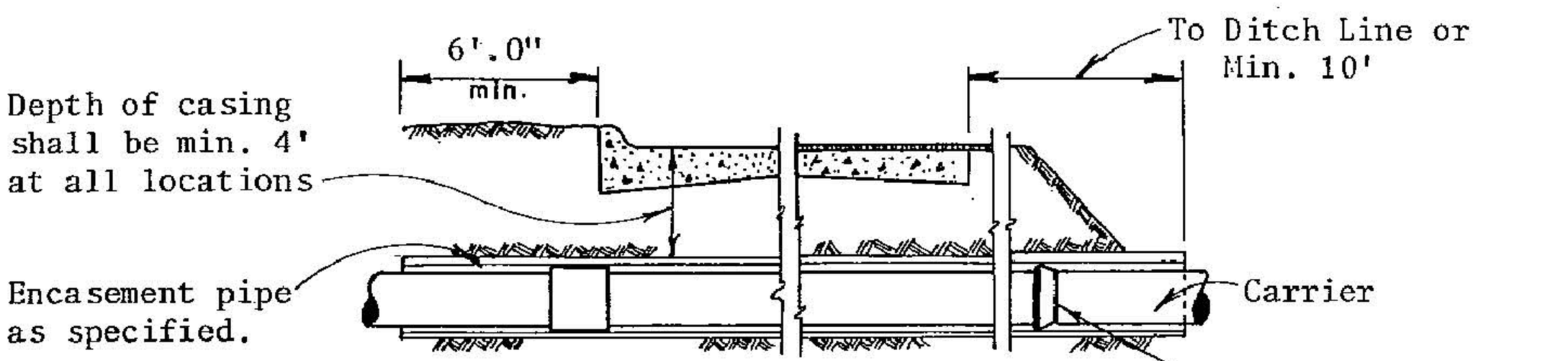

HIGHWAY CROSSING

Class 150 D.I. mechanical joint pipe.

CARRIER SIZE	MINIMUM ENCASEMENT		
	Corrugated Metal Pipe	Concrete Pipe	Steel Pipe
4" C.I.	12" - 14 GA	12" Class III	10" .25 Wall
6" "	15" - " "	15" " "	14" - " "
8" "	18" - " "	18" " "	16" - " "
10" "	21" - " "	18" " "	18" - " "
12" "	24" - " "	21" " "	20" - " "
14" "	24" - " "	24" " "	24" - " "
16" "	27" - " "	27" " "	26" - " "
18" "	30" - " "	30" " "	30" - " "
20" "	33" - " "	33" " "	36" - .375 "
24" "	36" - " "	36" " "	42" - " "

NOTE:

1. Steel casing shall have totally welded joints.
2. Steel casing shall be used in all bores.
3. C.M.P. shall be used only as casing when boring driveways and when laid in open-cut trench installation.

Huntsville Design Criteria	STANDARD BORED CROSSING	Scale: NONE
Revisions		FIGURE W-3

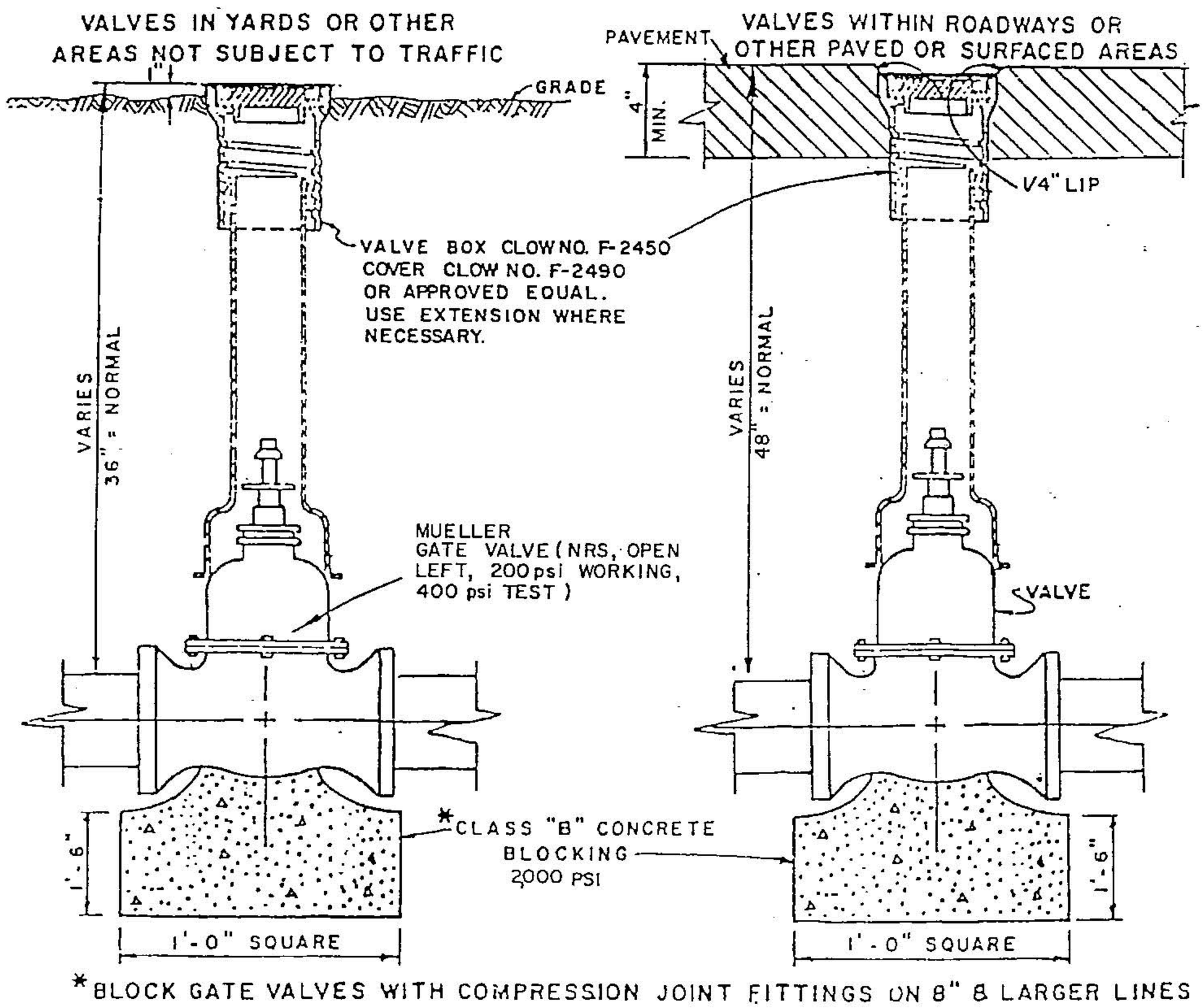

*BLOCK GATE VALVES WITH COMPRESSION JOINT FITTINGS ON 8" & LARGER LINES

Huntsville Design Criteria	GATE VALVE & BOX INSTALLATION 14-INCH AND SMALLER	Scale: NONE
Revisions		FIGURE W-4

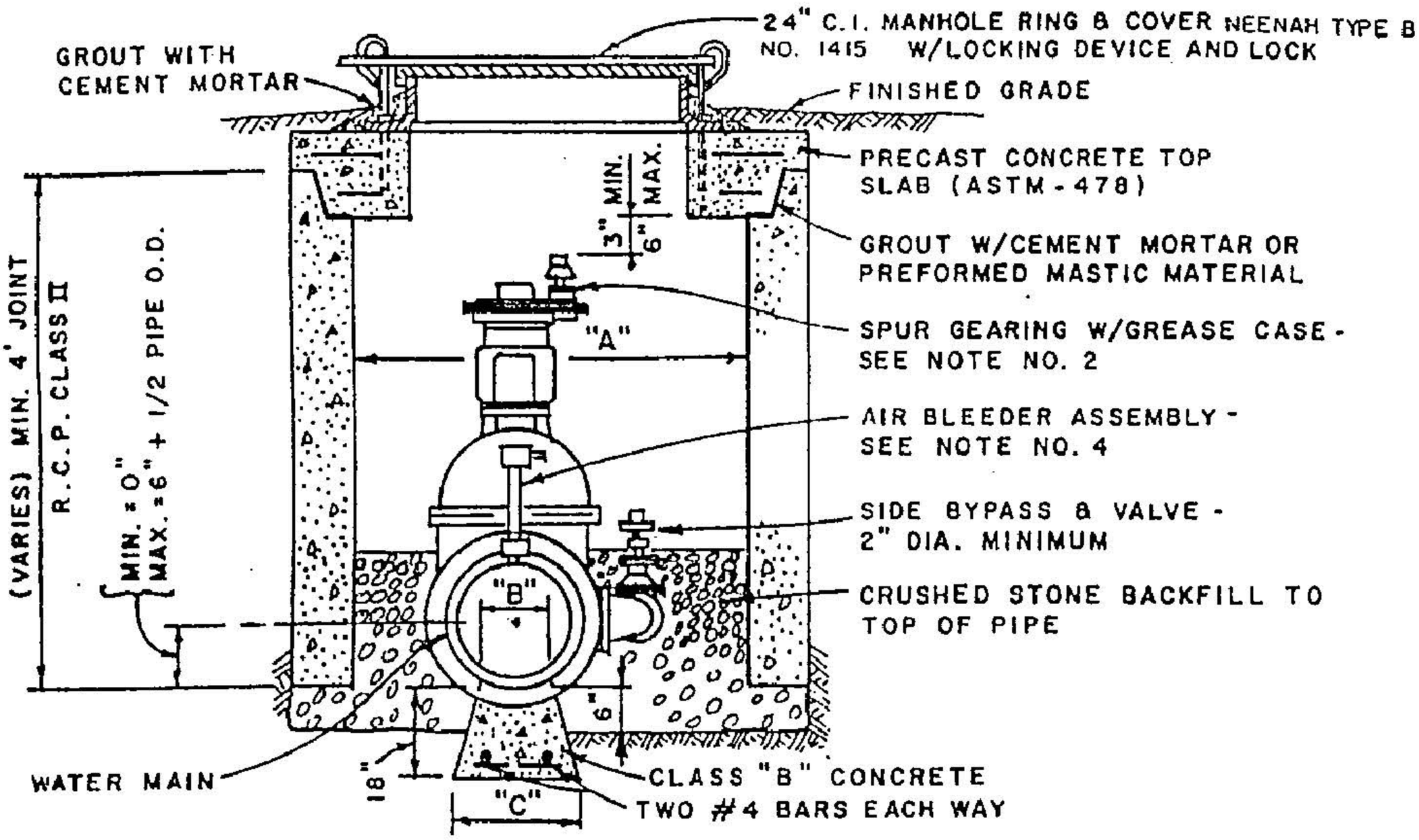

PIPE SIZE	"A"	"B"	"C"
16"	48"	10" SQ.	16" SQ.
18"	48"	12" SQ.	18" SQ.
20"	54"	12" SQ.	20" SQ.

NOTES:

1. PLACE 1/2 " EXPANSION JOINT MATERIAL AROUND WATER PIPE WHERE IT PASSES THROUGH CONCRETE VAULT.
2. VALVES 18" AND LARGER SHALL HAVE SPUR GEARING WITH GREASE CASE.
3. NOTE: LARGER DIAMETER R.C.P. MAY BE REQUIRED DEPENDENT UPON MANUFACTURER'S STANDARD SIZE FOR GATE VALVE.
4. PROVIDE CORPORATION WITH COPPER RISER AND CURB STOP AT A MAXIMUM OF 12" FROM EACH END OF GATE VALVE AS SHOWN. CORPORATION AND CURB STOP SIZES SHALL BE 1". EXTEND RISER TO WITHIN 24" OF TOP OF MANHOLE.
5. VALVES, BYPASS, CORPORATION STOP AND PIPING SHALL BE DESIGNED TO OPERATE AT THE MAXIMUM PRESSURES AS DESCRIBED IN THE SPECIFICATIONS.

Huntsville Design Criteria	GATE VALVE & VAULT INSTALLATION 16-INCH AND LARGER	Scale: NONE
Revisions		FIGURE W-5

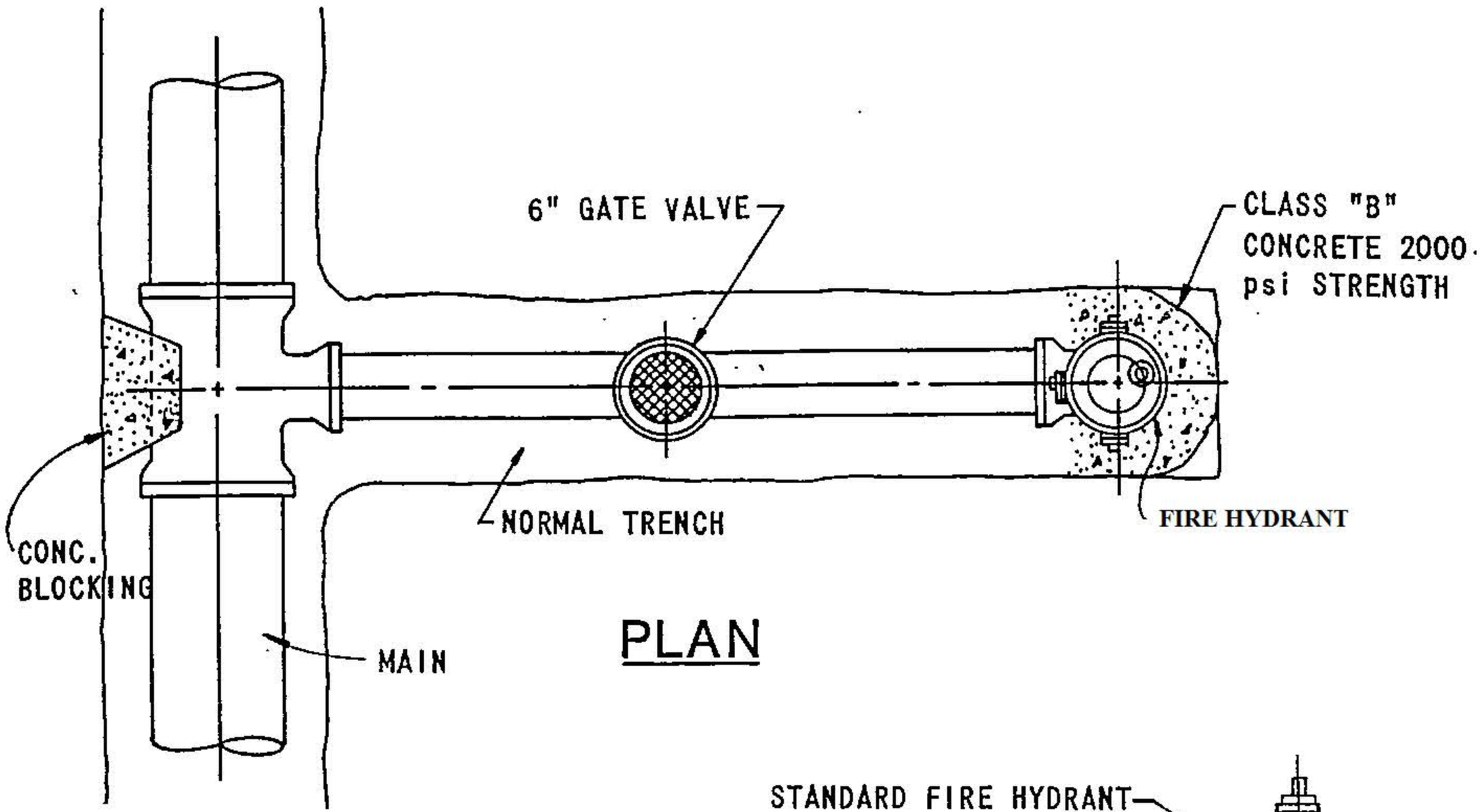

PLAN

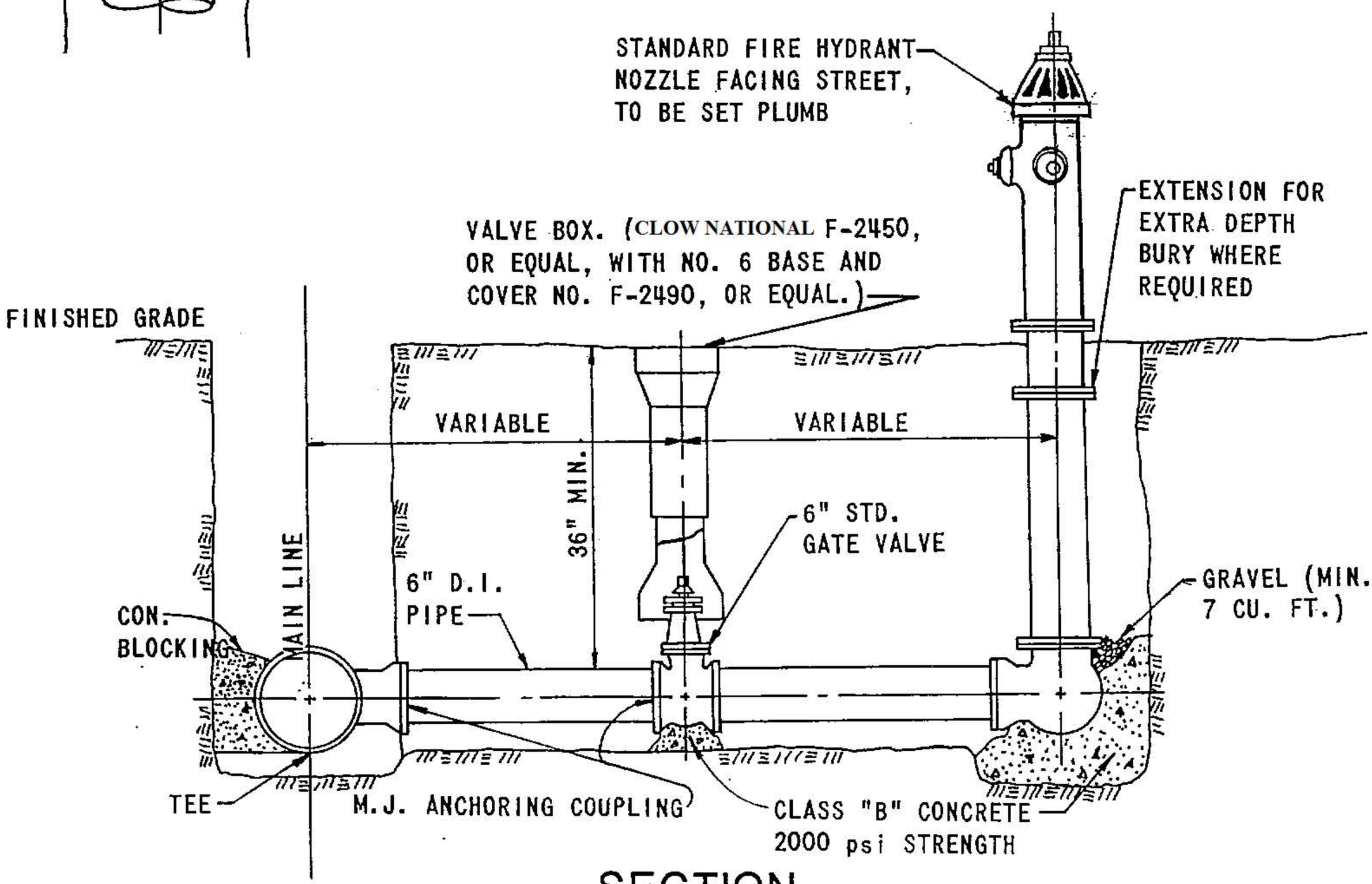

SECTION

GENERAL NOTES;

1: ALL GATE VAVLES ARE TO BE OF "O"RIGN TYPE WITH NON-RISING STEMS, COUNTER-CLOCKWISE OPEN (MUELLER a-2380-20 OR EQUIVALENT)
2: FIRE HYDRANT TO BE MUELLER "IMPROVED," BREAK-AWAY, OR APPROVED EQUIVALENT
3: WATER MAINS SHALL NOT BE FULLY PRESSURIZED UNTIL CONCRETE HAS REAQCHED 15 DAY STRENGTH

Huntsville Design Criteria	FIRE HYDRANT INSTALLATION	Scale: NONE
Revisions		FIGURE W-6

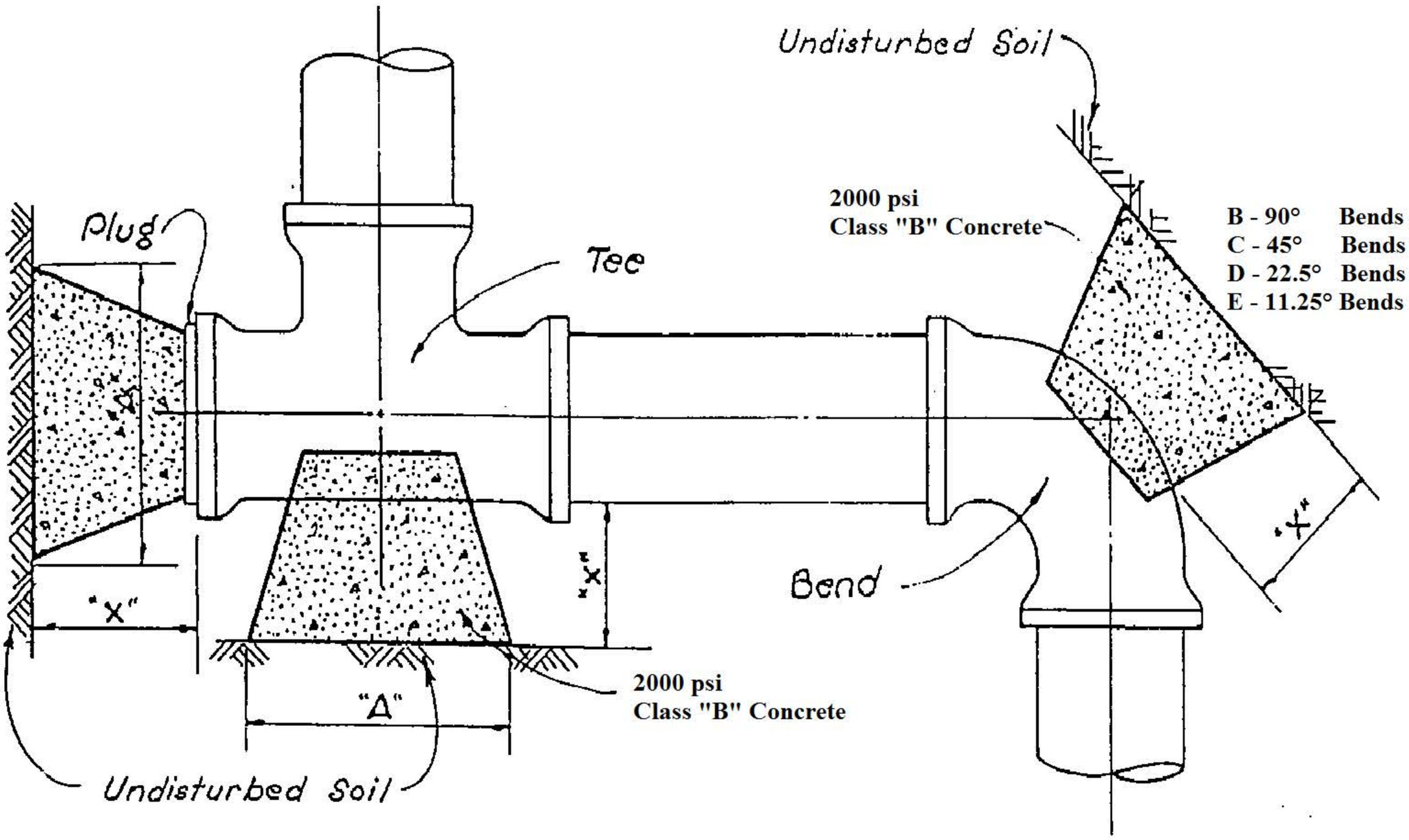

HORIZONTAL BLOCKING TABLE

Dimension "X" To Be A Minimum Of (1) Foot, But Is To Be Increased Where Necessary To Provide Bearing Against Undisturbed Trench Wall.

Pipe size (in.)	"X" DIM. (ft.)	PLUGS & TEES			90 deg. BENDS			45 deg. BENDS			22.5 deg. BENDS			11.25 deg. BENDS		
		"A"	MIN. AREA	MIN. VOL.	"B"	MIN. AREA	MIN. VOL.	"C"	MIN. AREA	MIN. VOL.	"D"	MIN. AREA	MIN. VOL.	"E"	MIN. AREA	MIN. VOL.
4	1	1'	0.83	0.05	1'	0.83	0.05	1'	0.83	0.05	1'	0.83	0.05	1'	0.83	0.05
6	1.5	1'	1.06	0.06	1'2"	1.50	0.09	1'	0.83	0.05	1'	0.83	0.05	1'	0.83	0.05
8	1.5	1'3"	1.89	0.11	1'6"	2.66	0.15	1'3"	1.44	0.08	1'	0.83	0.05	1'	0.83	0.05
10	1.5	1'8"	2.95	0.17	2'	4.17	0.24	1'6"	2.26	0.13	1'3"	1.15	0.07	1'	0.83	0.05
12	1.5	2'	4.25	0.24	2'3"	6.00	0.34	1'9"	3.25	0.18	1'3"	1.65	0.1	1'	0.83	0.05
16	2	2'7"	7.54	0.56	3'	10.65	0.79	2'3"	5.76	0.43	1'8"	2.94	0.22	1'2"	1.48	0.11
18	2	2'11"	7.7	0.57	3'5"	10.89	0.82	2'6"	5.89	0.44	1'10"	3.01	0.22	1'5"	1.51	0.11
20	2	3'3"	7.86	0.59	3'9"	11.12	0.84	2'9"	6.01	0.45	2'	3.07	0.23	1'7"	1.54	0.12
24	2	3'8"	11.33	0.84	4'3"	16.00	1.2	3'2"	8.65	0.65	2'6"	4.42	0.33	1'10"	2.22	0.17

Note: Calculations in MIN. AREA column are in SQ. FT.
Calculations in MIN. VOL. column are in CU. YD.

Huntsville Design Criteria	HORIZONTAL BLOCKING	Scale: NONE
Revisions		FIGURE W-7

NOTES:
1. Cradle to Extend Full Width of Trench. See Standard Cradle Detail.
2. This Detail Applies to Vertical Bends With Downward Thrust Reaction. See Anchor Block Details for Upward Thrusts.
3. Do Not Extend Cradle Past Joints.
4. Dimension "L" in Feet. Min. Volume in Cubic Yards

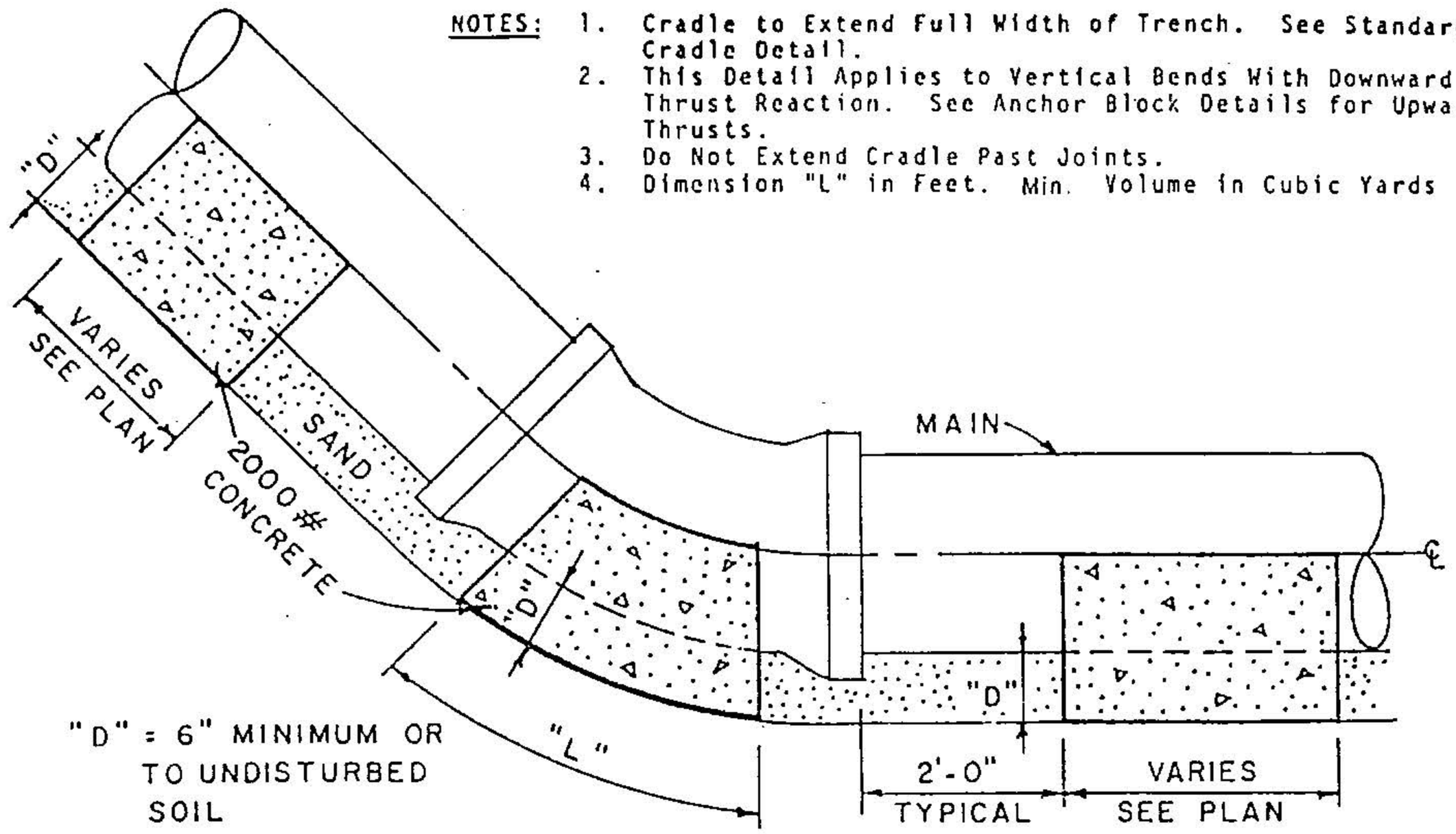

Pipe Class	Pipe Size	11° - 15'		22° - 30'		45°		90°	
		L	Min. Vol.	L	Min. Vol.	L	Min. Vol.	L	Min. Vol.
150	6"	.42	.02	.45	0.02	.50	.02	1.00	.04
150	8"	.42	.02	.45	.02	.80	.04	1.40	.06
150	10"	.42	.03	.58	.03	1.15	.06	2.03	.11
150	12"	.42	.04	.73	.05	1.43	.09	2.53	.17
150	16"	.42	.08	.74	.14	1.48	.27	2.61	.48
150	18"	.66	.14	1.30	.28	See Plan Sheets For Blocking		See Plan Sheets For Blocking	
150	20"	.77	.18	1.53	.36				
200	18"	.88	.18	1.74	.37				
200	20"	1.03	.24	2.04	.48				
250	18"	1.05	.22	2.03	.43				
250	20"	1.20	.28	2.38	.56				

Huntsville Design Criteria	CONCRETE CRADLE AT VERTICAL BENDS	Scale: NONE
Revisions		FIGURE W-8

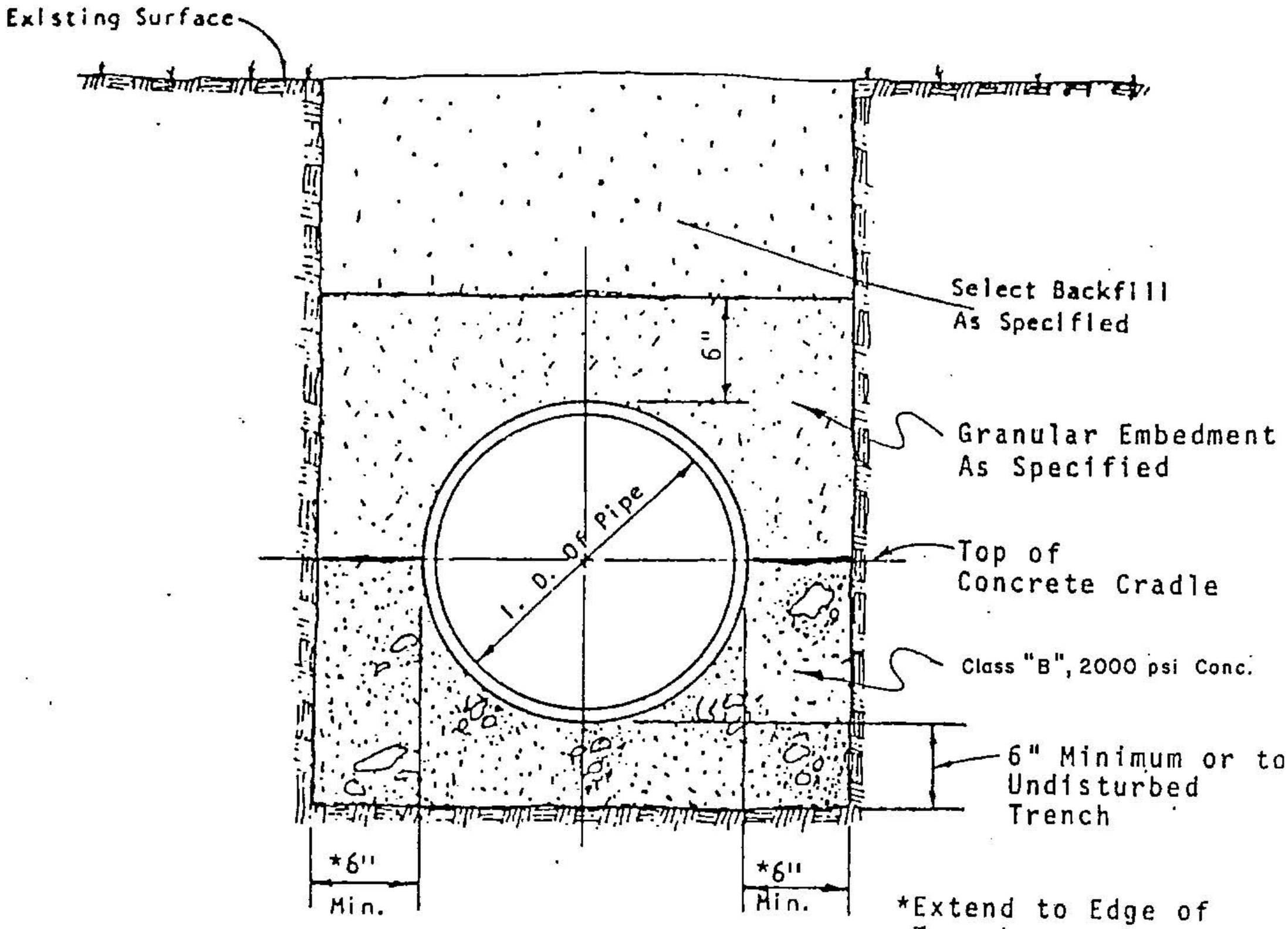

Huntsville Design Criteria	CONCRETE CRADLE	Scale: NONE
Revisions		FIGURE W-9

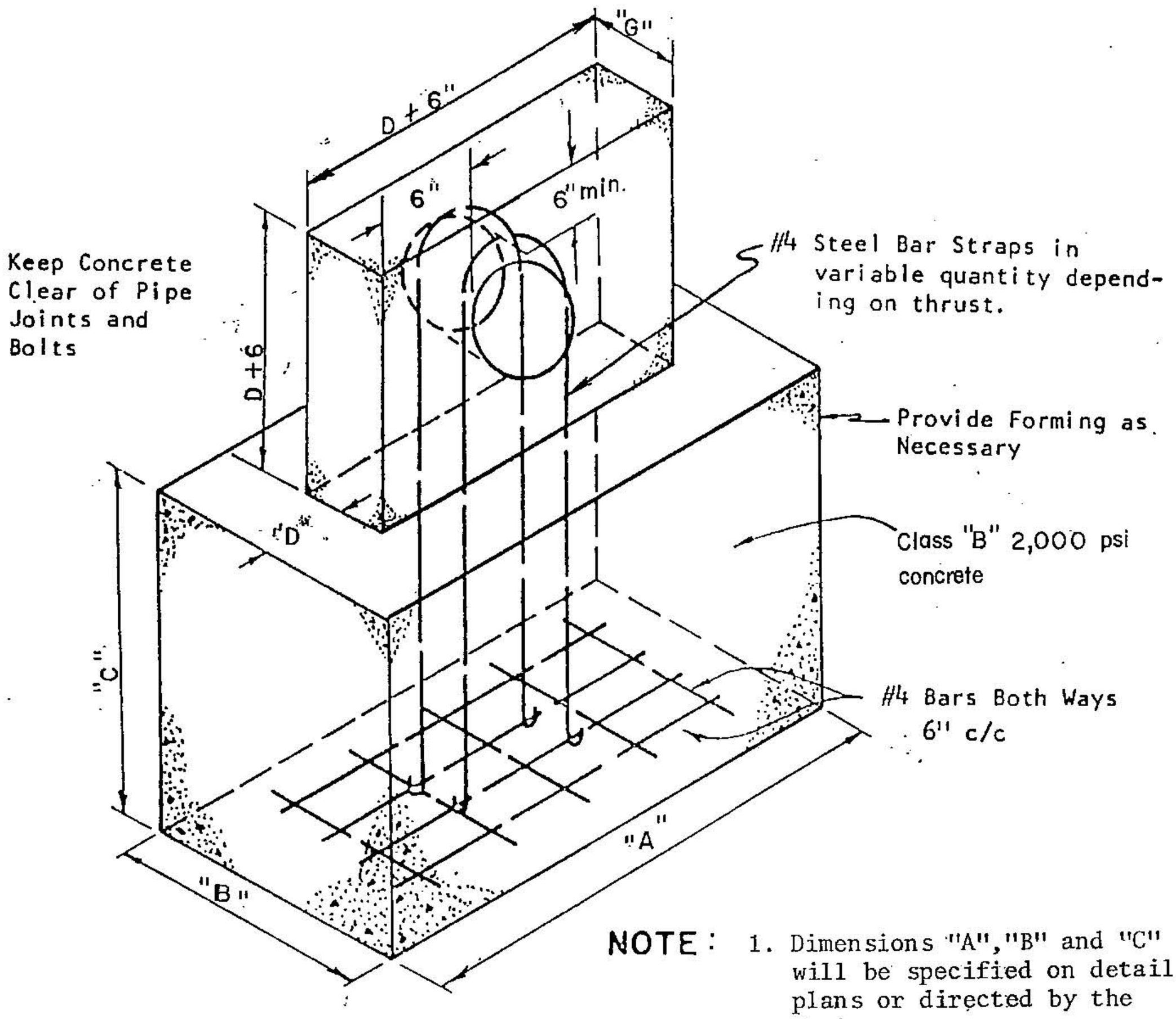

NOTE:

1. Dimensions "A","B" and "C" will be specified on detail plans or directed by the Engineer.

2. D = pipe outside diameter

Huntsville Design Criteria	VERTICAL TIE-DOWN BLOCKING	Scale: NONE
Revisions		FIGURE W-10

Sizing Installations	
Main Size	Valve Size
1" to 4"	1/2"
6" to 10"	1"
12" to 18"	2"
20" to 24"	3"
26" to 30"	4"

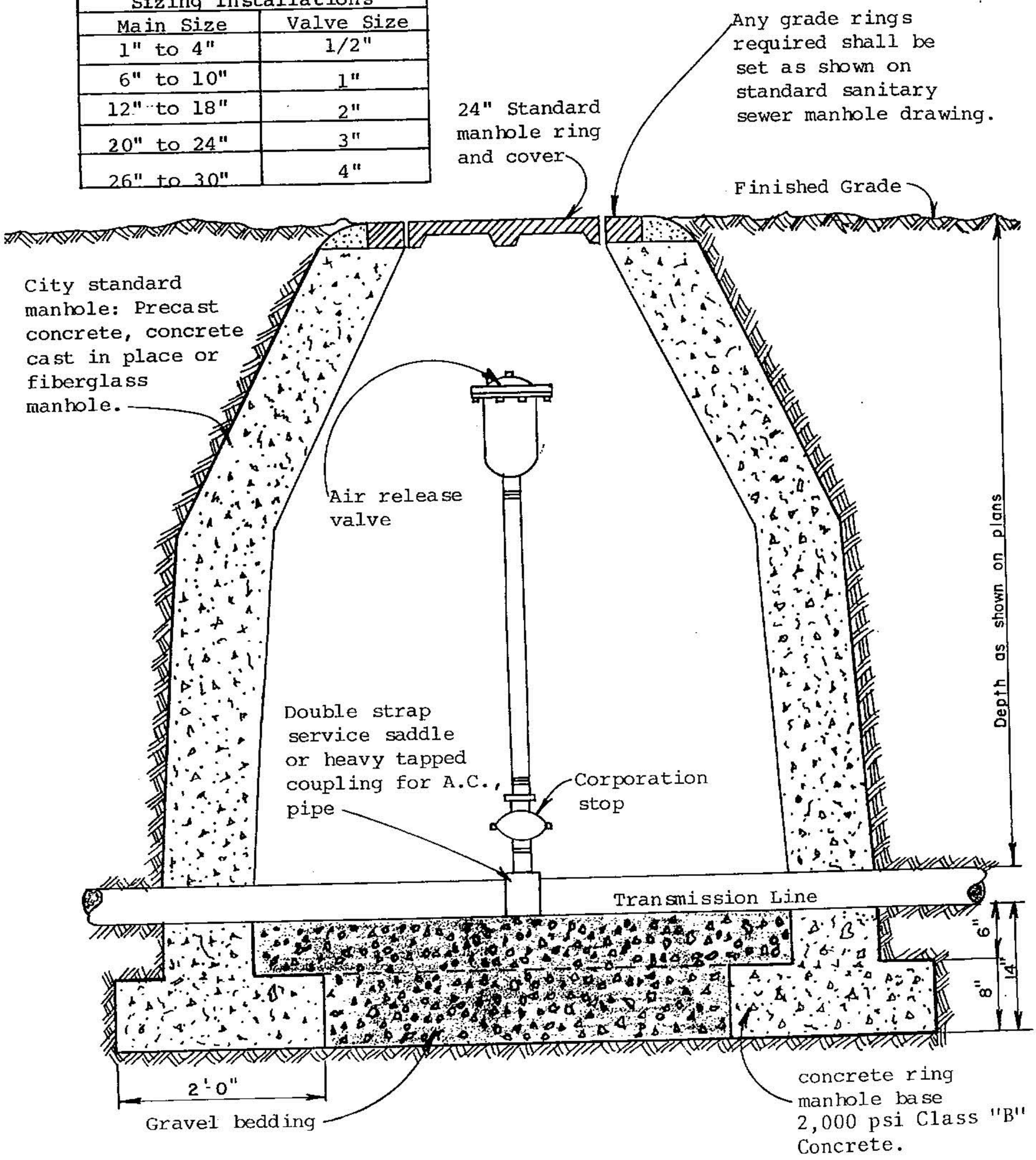

Huntsville Design Criteria	AIR RELEASE VALVE DETAIL	Scale: NONE
Revisions		FIGURE W - 11

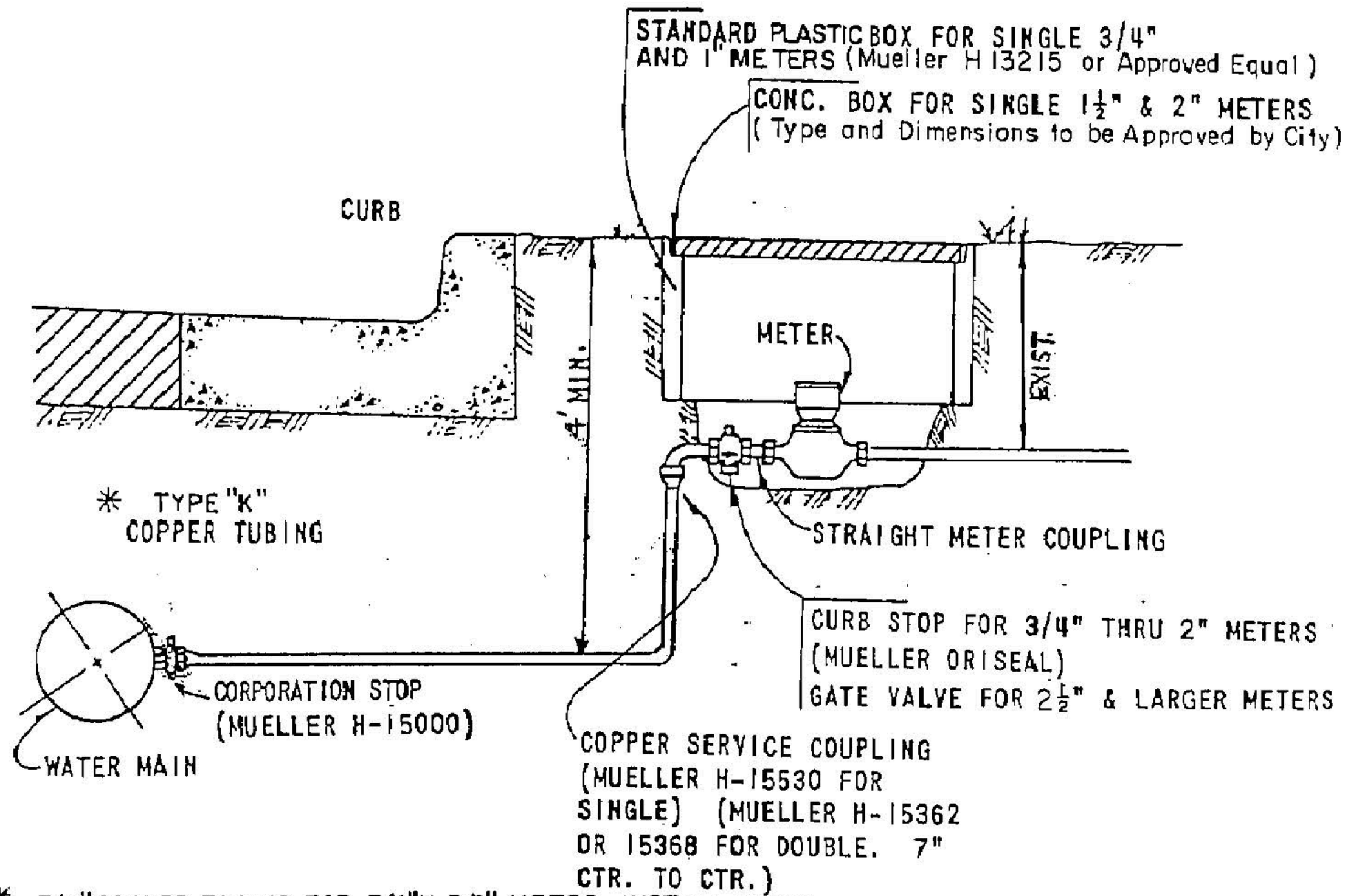

* 3/4" COPPER TUBING FOR 3/4" X 5/8" METER INSTALLATION.

1" COPPER TUBING FOR 1" METER INSTALLATION

The City of Huntsville will make all Standard Residential Water Service connections, unless written approval to do otherwise has been granted by the City.

Huntsville Design Criteria	WATER SERVICE CONNECTION	Scale: NONE
Revisions		FIGURE W-12

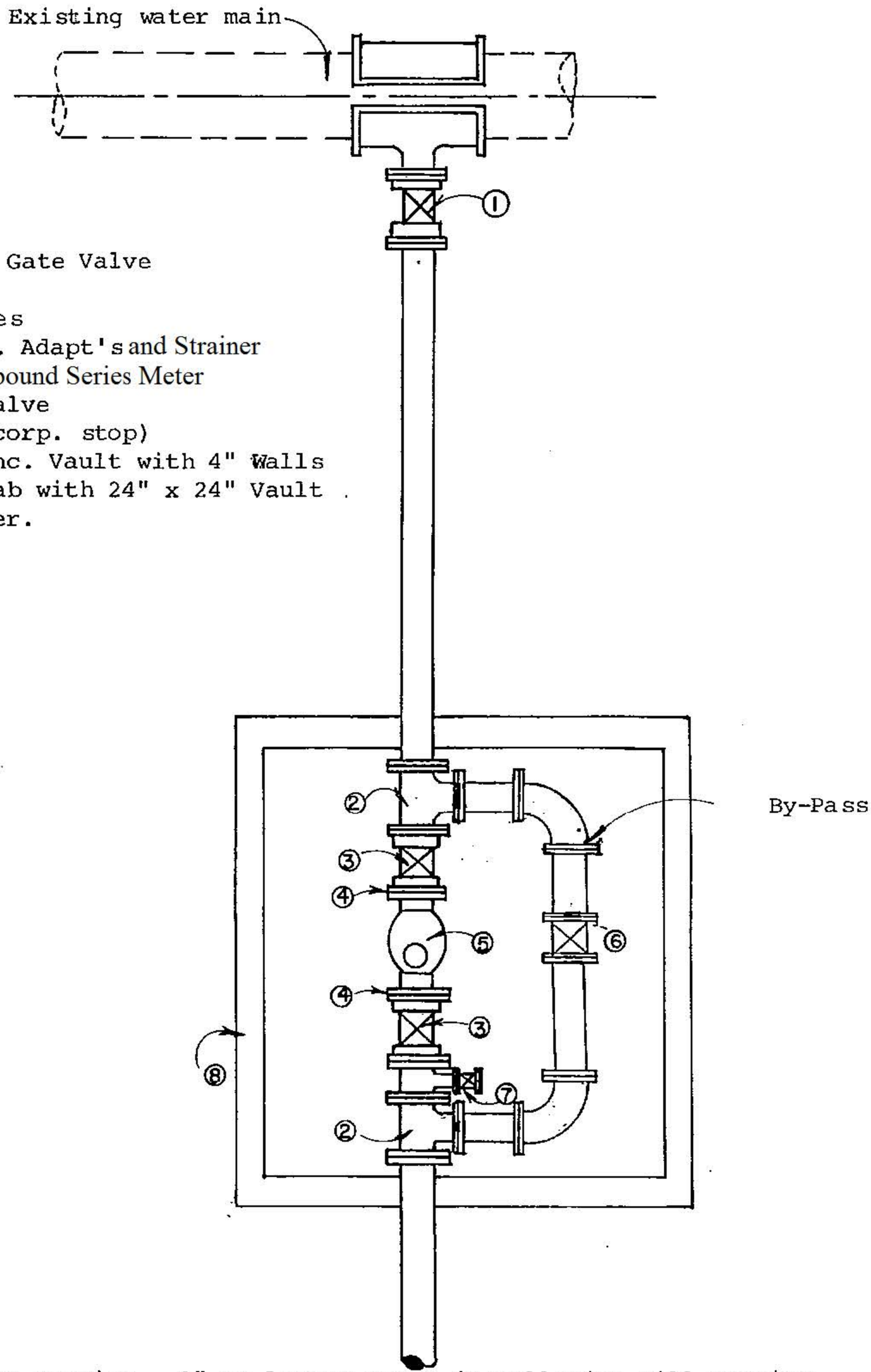

① Tapping Tee & Gate Valve
② Two Tee
③ Two Gate Valves
④ Two Flg. Coup. Adapt's and Strainer
⑤ 2" to 10" Compound Series Meter
⑥ One 2" Gate Valve
⑦ 2" Test Tee (corp. stop)
⑧ Reinforced Conc. Vault with 4" Walls and 4" Top Slab with 24" x 24" Vault Frame and Cover.

Typical water meter service. 2" or larger meter installation will require concrete vault and a by-pass assembly.

Huntsville Design Criteria	2" & LARGER WATER SERVICE CONNECTION	Scale: NONE
Revisions		FIGURE W-13

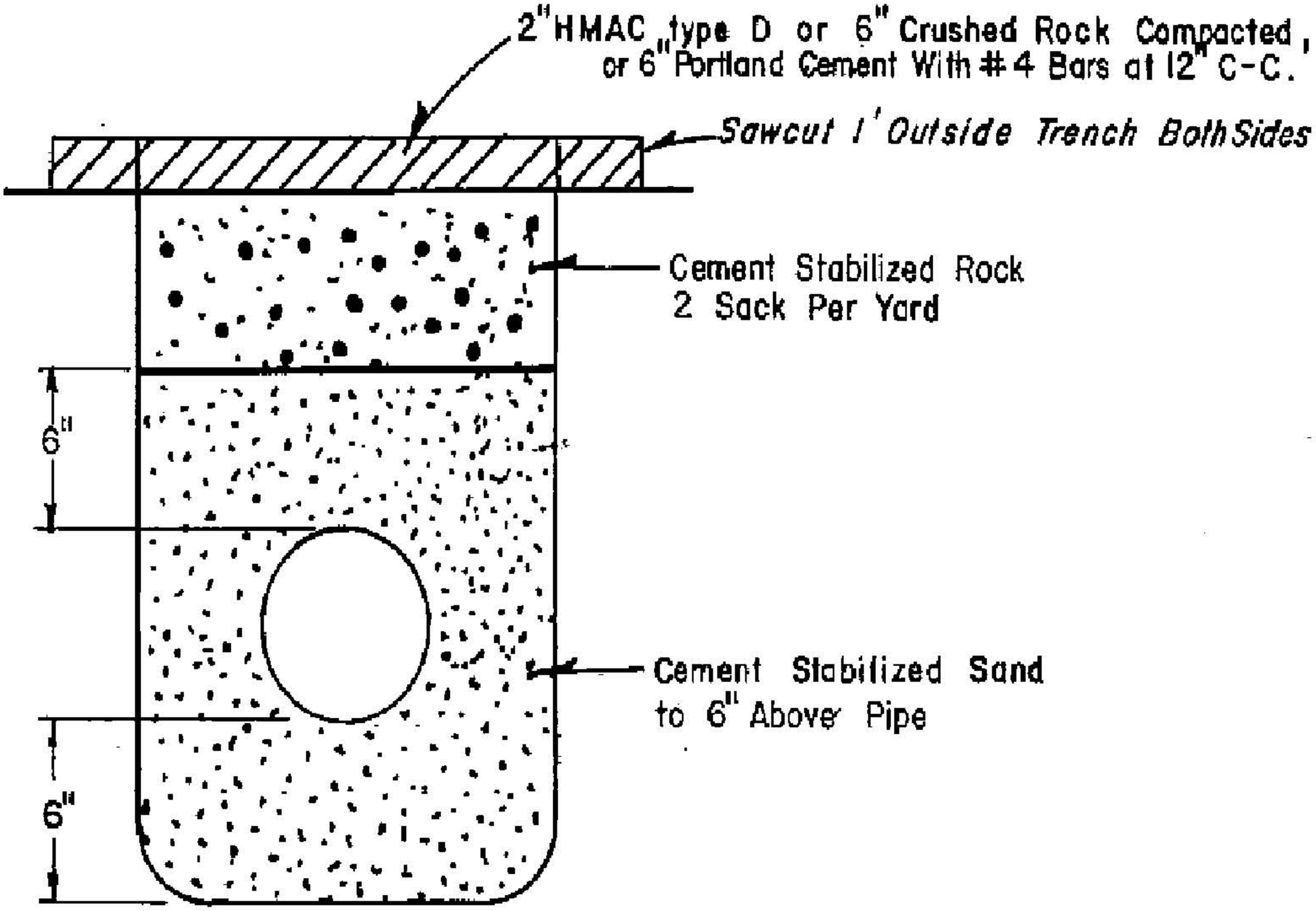

Huntsville Design Criteria	TRENCH BACKFILL UNDER ROADWAY	Scale: NONE
Revisions		FIGURE W - 14

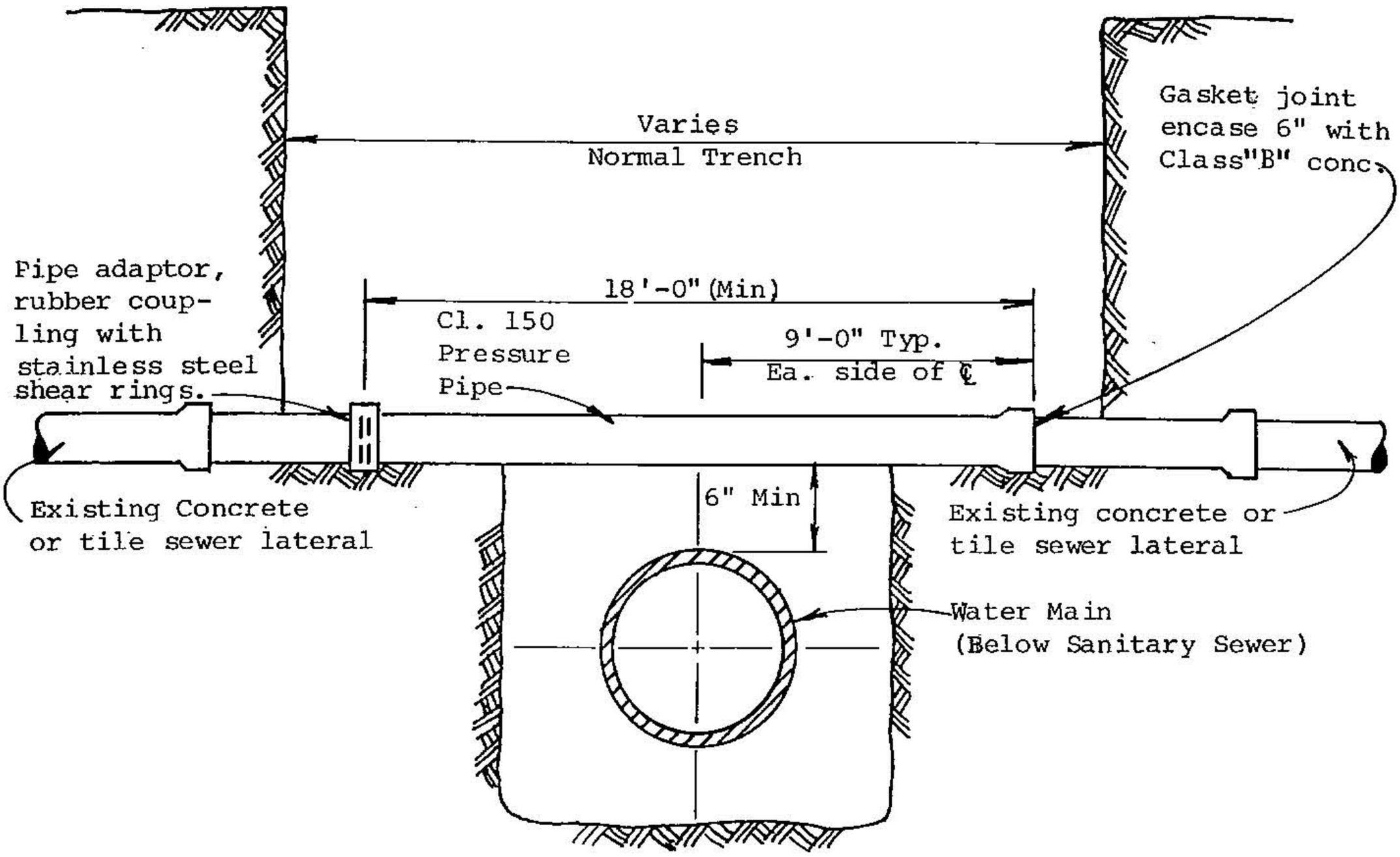

NOTE:

1. No joints will be allowed in the span of the trench. Contractor shall furnish class 150 pressure pipe of sufficient length to achieve this.

2. Water main crossing above sanitary sewer: Contractor shall excavate to sanitary sewer and replace sewer as shown, or encase sewer in concrete. Minimum clearance between water and sewer lines shall be 6".

3. All excavation within 3' of existing curb must be backfilled with 2 sack per cubic yard cement stabilized sand.

4. If the waterline can be placed a minimum of 2' above an existing sewer, then the sewer line may be left undisturbed.

Huntsville Design Criteria	REPLACEMENT OF SANITARY SEWER PIPE LATERAL	Scale: NONE
Revisions		FIGURE S-1

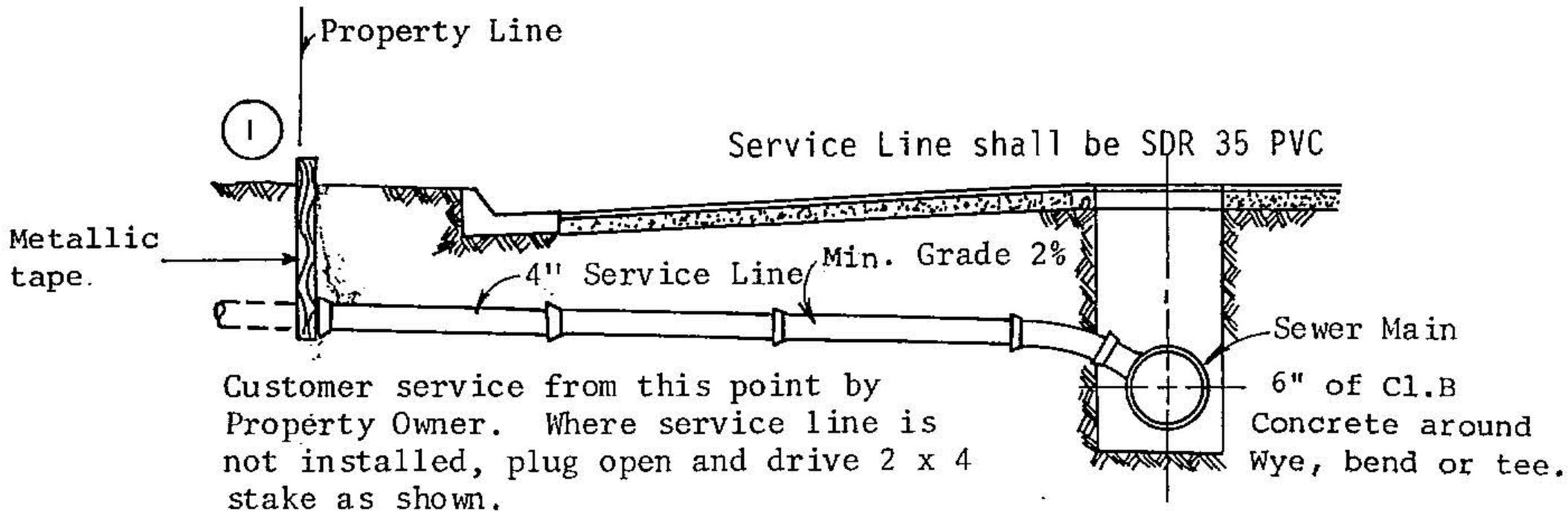

TYPICAL SEWER SERVICE STREET SECTION

NOTE: Either Wye or Tee may be used for connection. Connections down to 7'-0" are "STANDARD" service connections. DEEP CUT service connections apply when trench is deeper than 7'-0". Minimum cover over sewer service pipe is 24" below subgrade or as required to service customer.

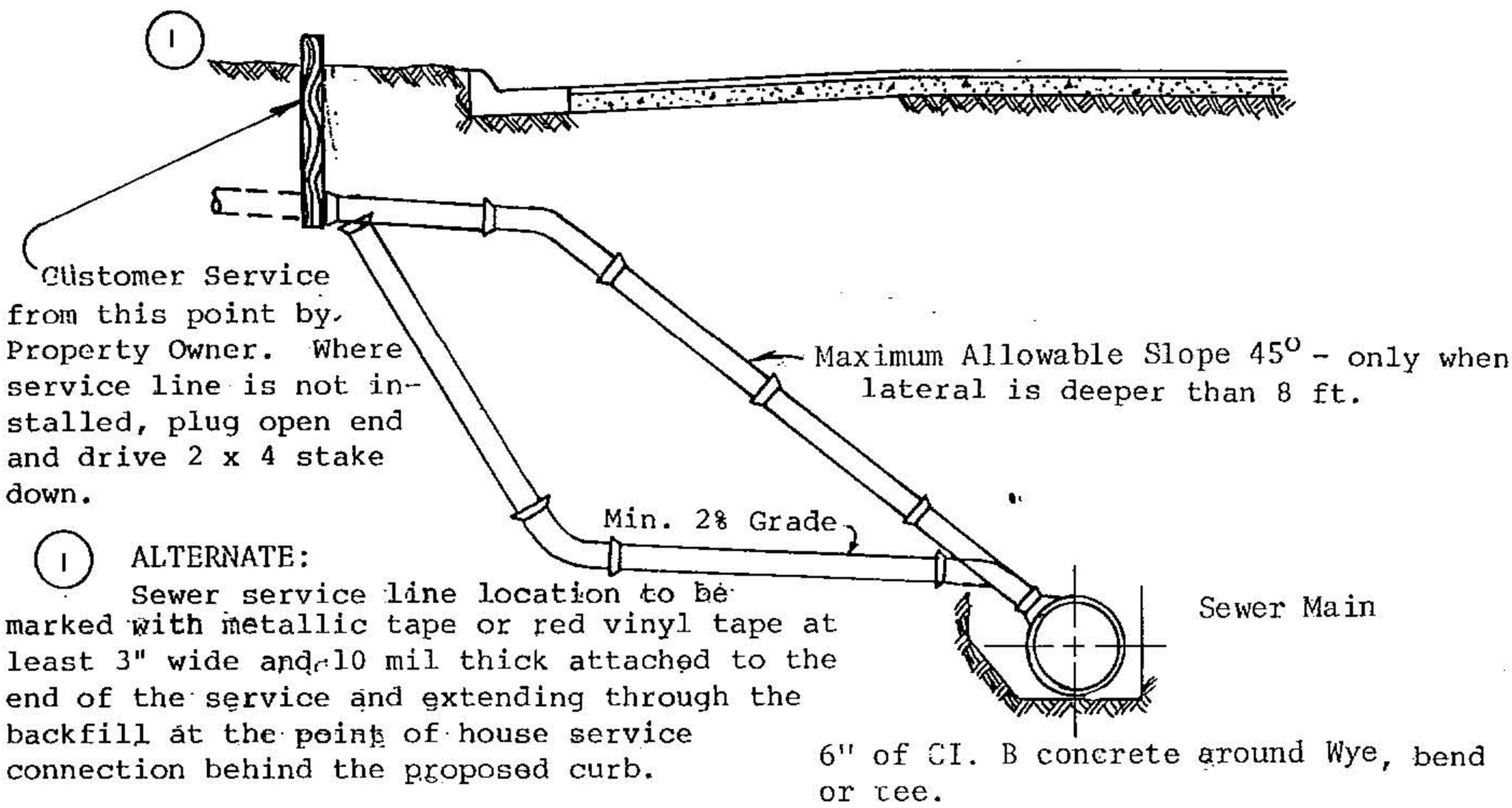

DEEP SERVICE CONNECTION

The City of Huntsville will make all Standard Residential sewer Service connections unless written approval to do otherwise has been granted by the City.

Huntsville Design Criteria	SEWER SERVICE LINE CONNECTION	Scale: NONE
Revisions		FIGURE S-2

Sanitary Sewer Manhole Cover

Heavy Duty
Ductile Iron (70-50-05)

ASTM A536

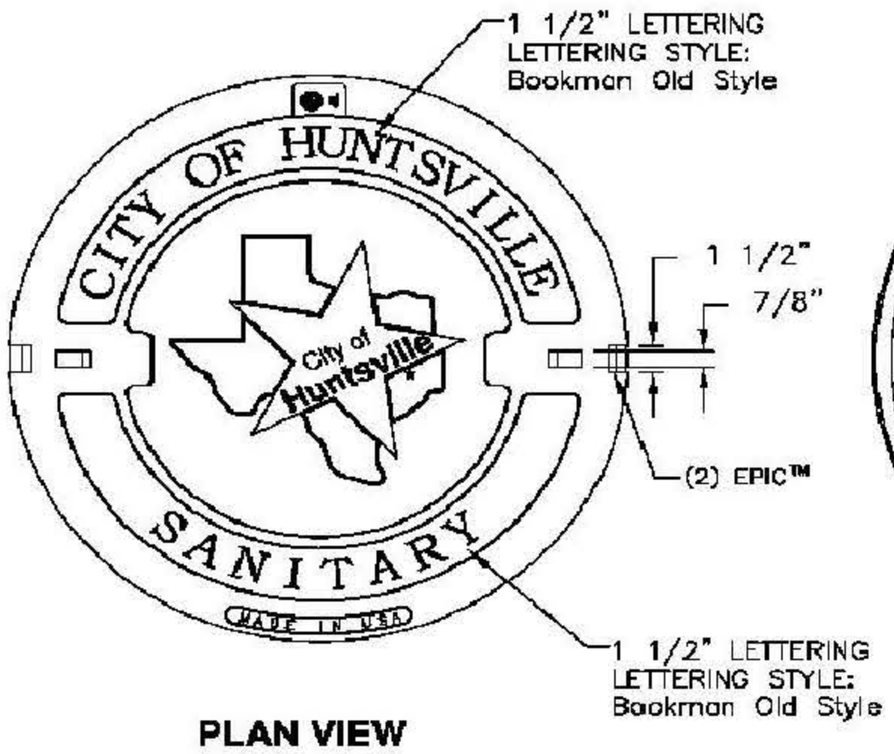

PLAN VIEW

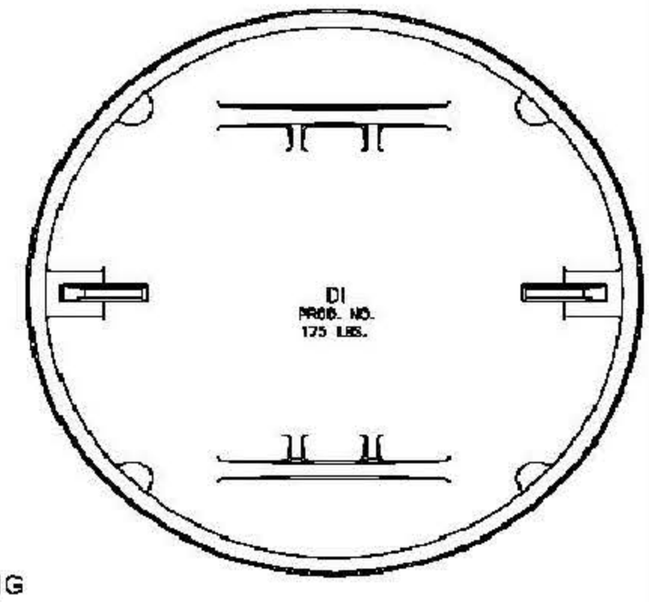

BOTTOM VIEW

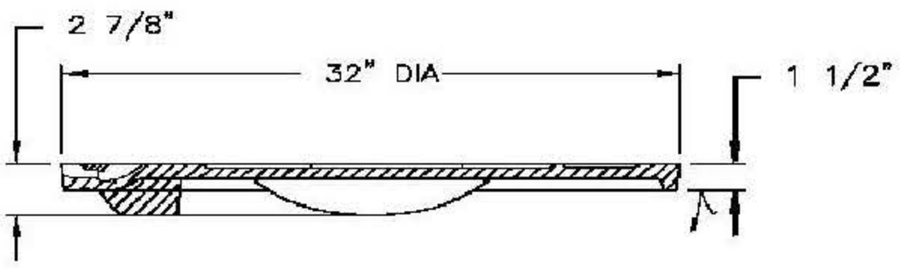

CROSS SECTION

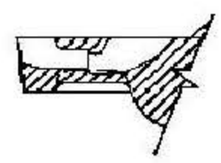

EPIC™ PICKBAR

Sanitary Sewer Manhole

Manhole to be precast conc., cast in place, or fiberglass construction (Owens-Corning 40,000 psi or approved equal)

(The interior of all manholes shall have a protective coating. This coating shall be as described in the following or shall be an alternate coating providing the same or better level of protection as the specified coating. The interior manhole coating shall consist of a heavy coat modified Polyamine Epoxy (Tnemec Series 435 Perma-Glaze or accepted equivalent) applied in strict accordance with manufacturer's recommendations. Minimum total dry film thickness for 4' diameter manhole shall be 15 mils. Minimum total dry film thickness for wet wells shall be 60 mils.)

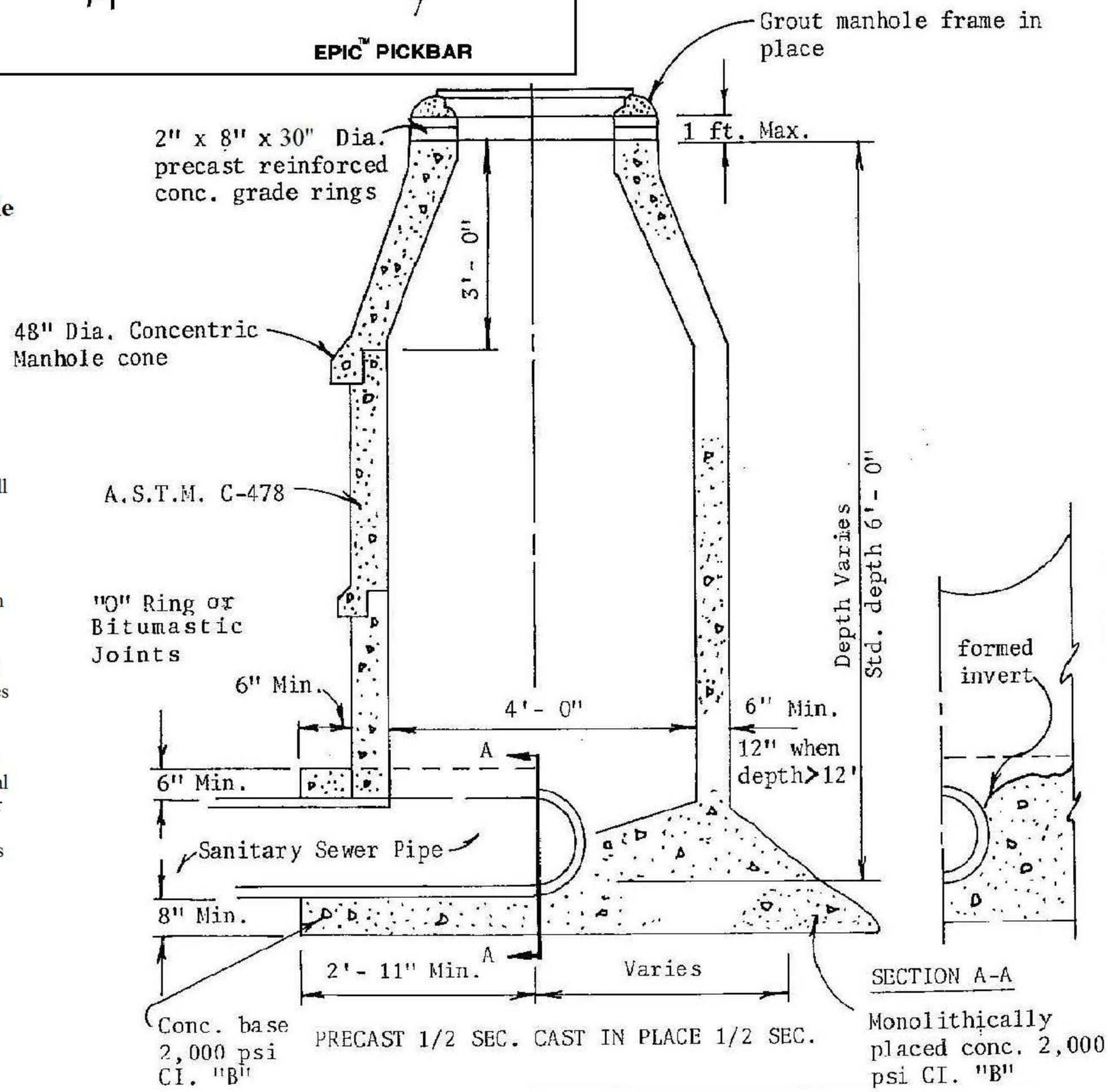

Huntsville Design Criteria	STANDARD SANITARY SEWER MANHOLE	Scale: NONE
Revisions		FIGURE S-3

1. WALL THICKNESS TO BE 12" FOR MANHOLES GREATER THAN 12' DEPTH.

2. THE DIAMETER OF THE CONCRETE BASE SHALL NOT BE LESS THAN THE INSIDE DIAMETER OF THE MANHOLE PLUS 2'-6"; IN ROCK EXCAVATION INSIDE DIAMETER PLUS WALL THICKNESS.

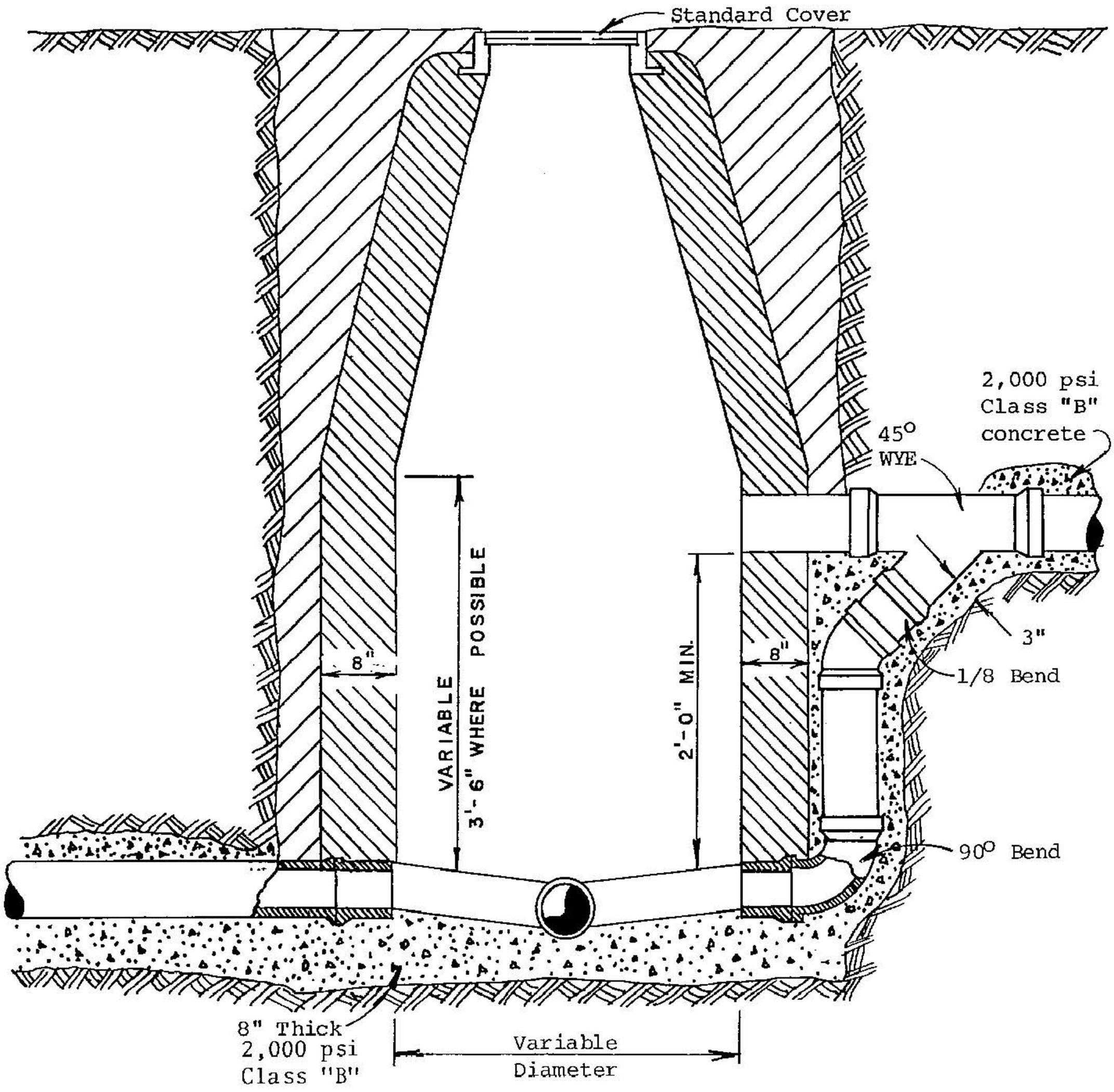

3. MANHOLE TO BE PRECAST CONCRETE, CAST IN PLACE, OR FIBERGLASS CONSTRUCTION.

4. DROP MANHOLE SHALL BE USED WHENEVER THE DIFFERENCE IN THE INLET AND OUTLET ELEVATIONS ARE 2' OR GREATER.

Huntsville Design Criteria	SANITARY SEWER DROP MANHOLE	Scale: NONE
Revisions		FIGURE S-4

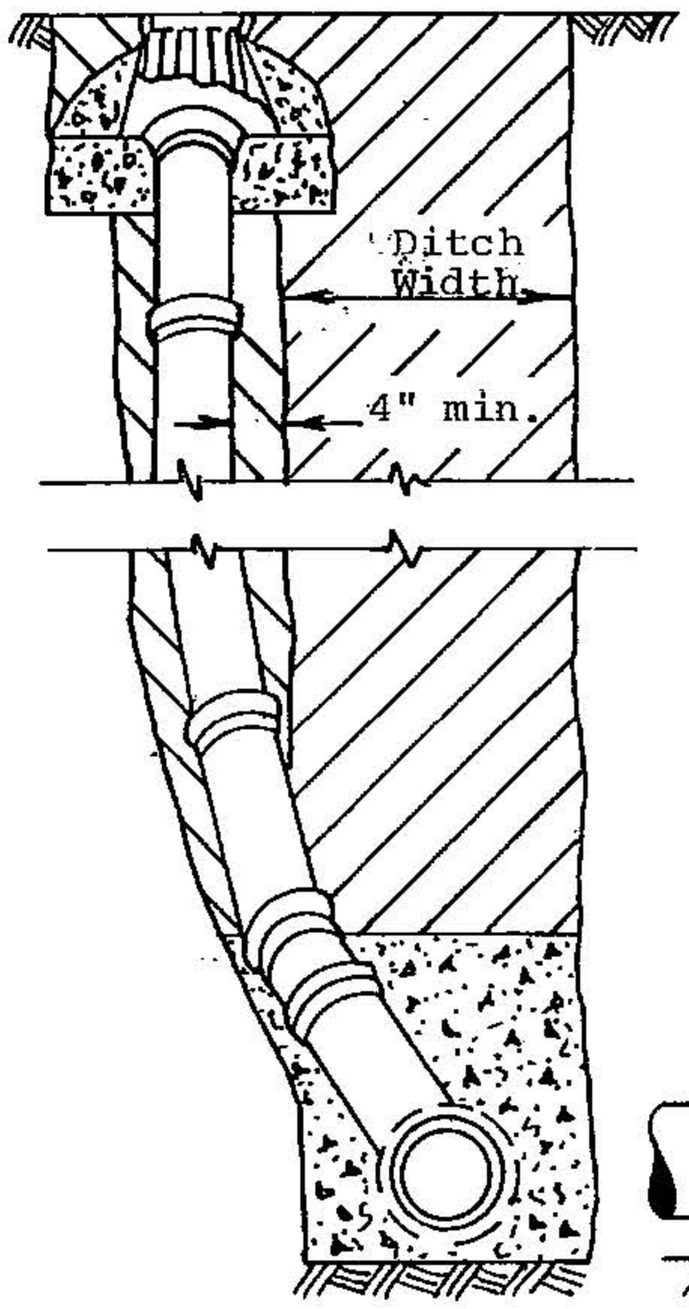

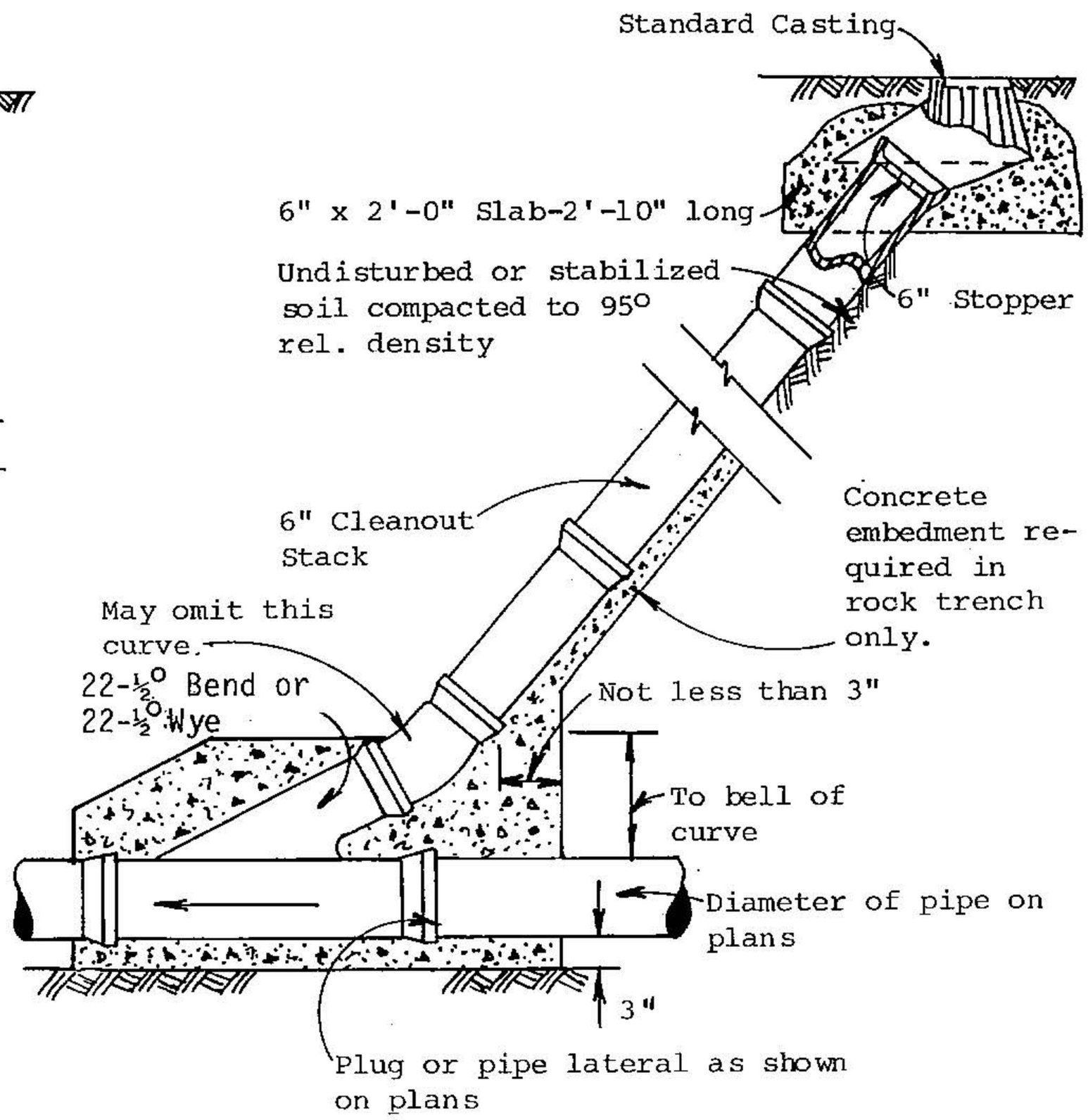

Huntsville Design Criteria	STANDARD SEWER CLEANOUT	Scale: NONE
Revisions		FIGURE S - 5

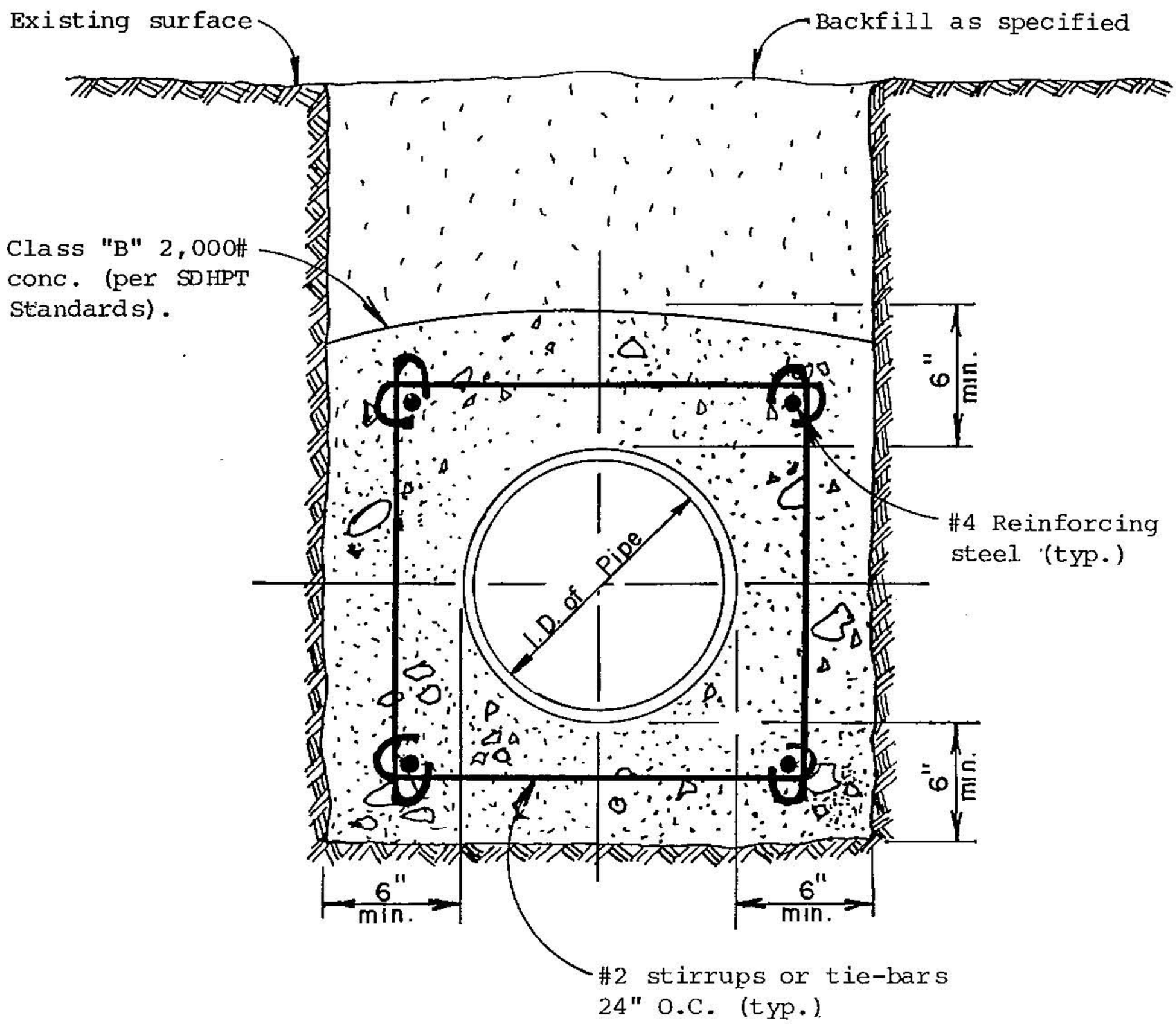

Huntsville Design Criteria	CONCRETE ENCASEMENT SANITARY SEWER	Scale: NONE
Revisions		FIGURE S-6

SADDLES FOR FIELD CUT-IN CONNECTIONS

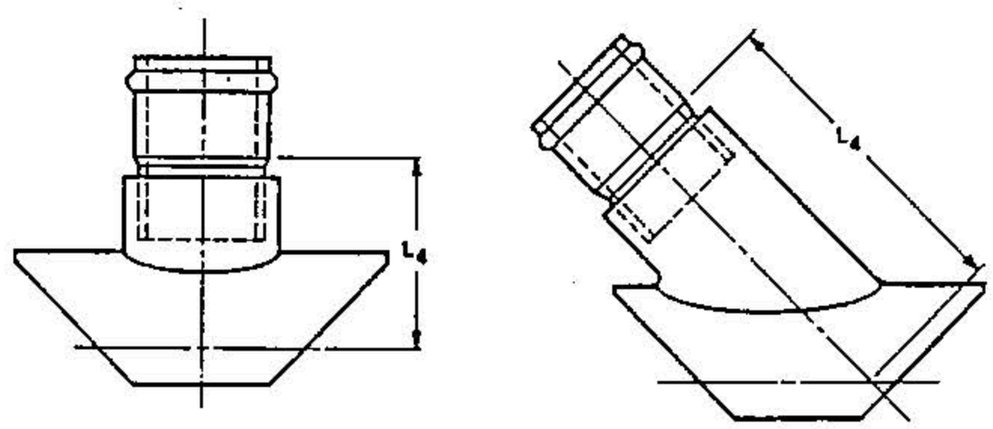

TEE SADDLE			WYE SADDLE		
D	L_4	Wt. lbs.	D	L_4	Wt. lbs.
6 x 4	6.0	2.3	6 x 4	7.1	5.9
8 x 4	7.0	2.3	8 x 4	7.9	5.9
8 x 6	7.8	4.5	8 x 6	9.7	5.4
10 x 4	9.0	2.3	10 x 4	9.3	5.9
10 x 6	9.8	4.5	10 x 6	11.1	5.4
12 x 4	10.0	2.3	12 x 4	10.8	5.9
12 x 6	10.8	4.5	12 x 6	12.5	5.4

The base of the saddle is curved to fit the size for which it was made.

PROCEDURE FOR PLACING SADDLE CONNECTION

1. Place saddle in position on pipe. Mark hole guide for cut in pipe using saddle as a template. Remove saddle from pipe.
2. Auger a hole into pipe wall on hole guide mark.
3. The hole should be 1/2" outside the hole guide mark.
4. Wipe clean and dry both the underside of the saddle and the mating surface of the pipe.
5. Apply primer to both mating surfaces. Check the PVC surfaces while still wet with primer to see that the surfaces have been etched.
6. While the surfaces are still wet with primer, liberally brush cement base on mating surface of saddle and pipe.
7. Immediately position the saddle over the hole in the pipe and draw down with metal straps or other suitable means. The saddle must not be moved once it makes contact with the pipe.

Huntsville Design Criteria	TEE & WYE SADDLES PVC PIPE	Scale: NONE
Revisions		FIGURE S-7

Huntsville
Design Criteria
Revisions

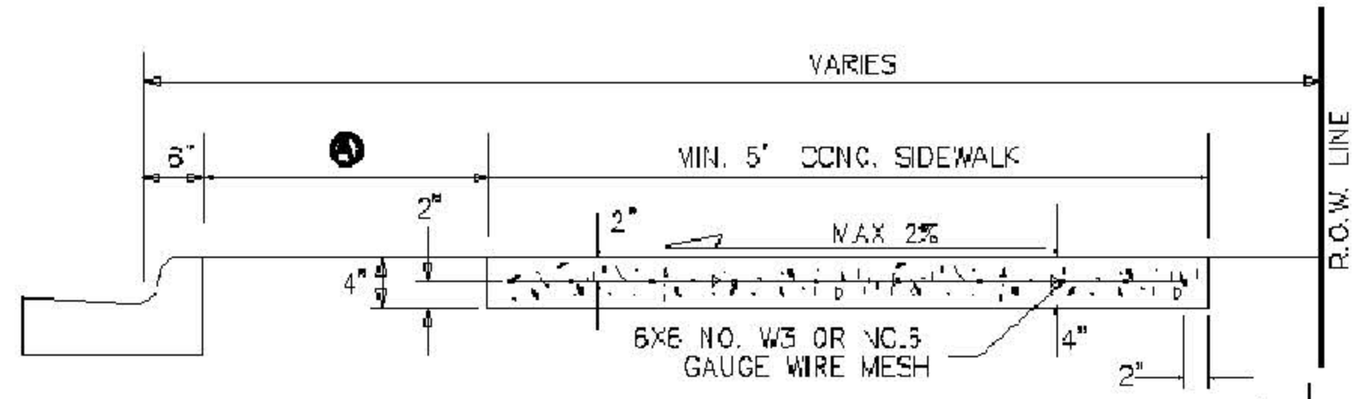

TYPICAL CONC. SIDEWALK

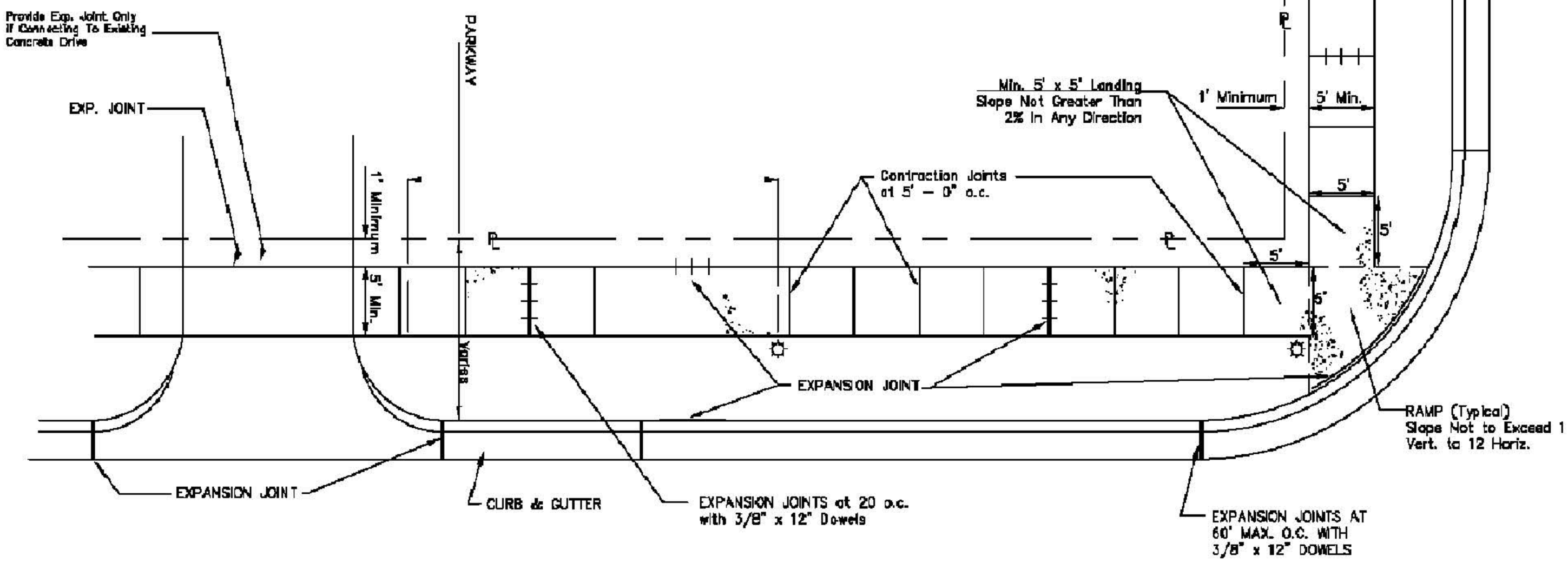

1. EXPANSION JOINS SHALL BE MINIMUM 1/2" TREATED FELT; DOWEL BARS SHALL BE 3/8" X 12" SMOOTH BARS SPACED ONE FOOT APART WITH ONE END COATED (GREASE OR PLASTIC)

2 ALL RAMPS SHALL HAVE A 5' x 5' LANDING PAD.

3. RAMP CENTER TO BE PERPENDICULAR TO FACE OF CURB. A PERPENDICULAR RAMP MAY BE LOCATEDWITHIN THE RADIUS OF A CURBLINE.

4. SIDEWALK GRADE TO BE PARALLEL TO TOP OF CURB AND GUTTER UNLESS OTHERWISE SHOWN ON PLANS OR DIRECTED BY THE ENGINEER.

5. SIDEWALK WIDTH AS SHOWN ELSEWHERE IN PLANS.MIN WIDTH 5'. PROVIDE DROPPED CURBS AT INTERSECTIONS. ALL CONCRETE SHALL BE CLASS "A" PROPOSED SIDEWALKS TO MATCH EXISTING SIDEWALK.

6. NO VERTICAL CHANGES SHALL EXCEED 1/~" IN ELEVATION AT ADJOINING SURFACES.

7. DESIRABLE 3' OR GREATER FOR HIGH SPEED TRAFFIC. FOR BORDER WIDTHS OF 8' OR LESS, PLACE SIDEWALK ADJACENT TO CURB

Typical Curb and Gutter
Sidewalk and Driveway

Scale:
NONE

FIGURE
R-1

Huntsville
Design Criteria
Revisions

TYPICAL RESIDENTIAL PAVING (CONCRETE)

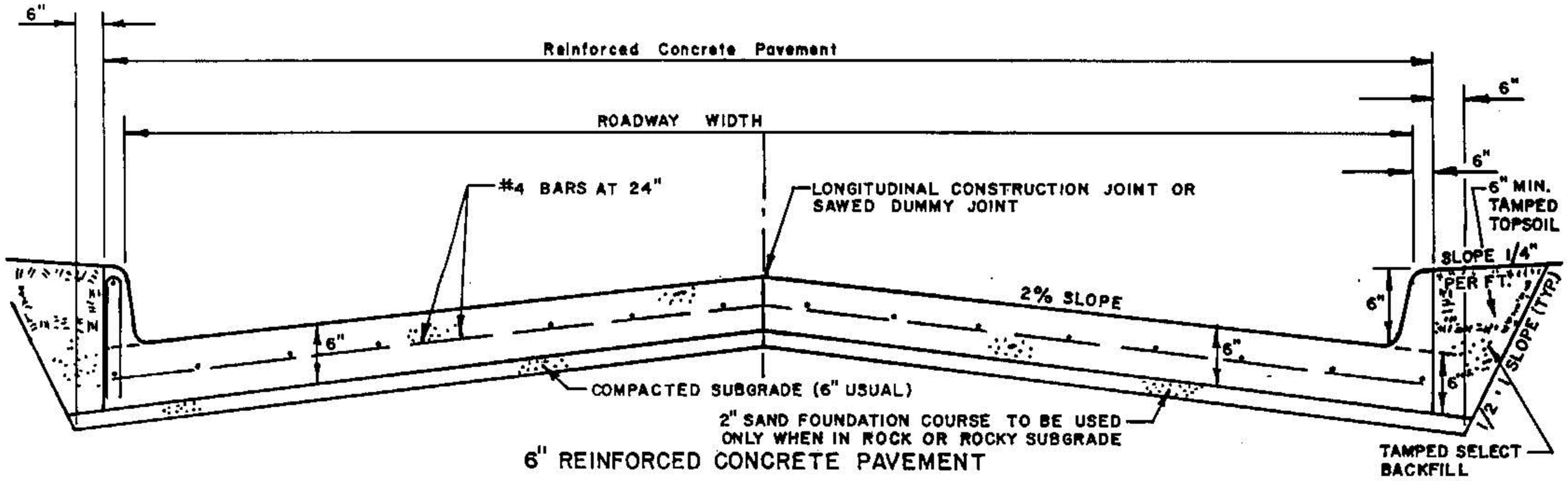

6" REINFORCED CONCRETE PAVEMENT

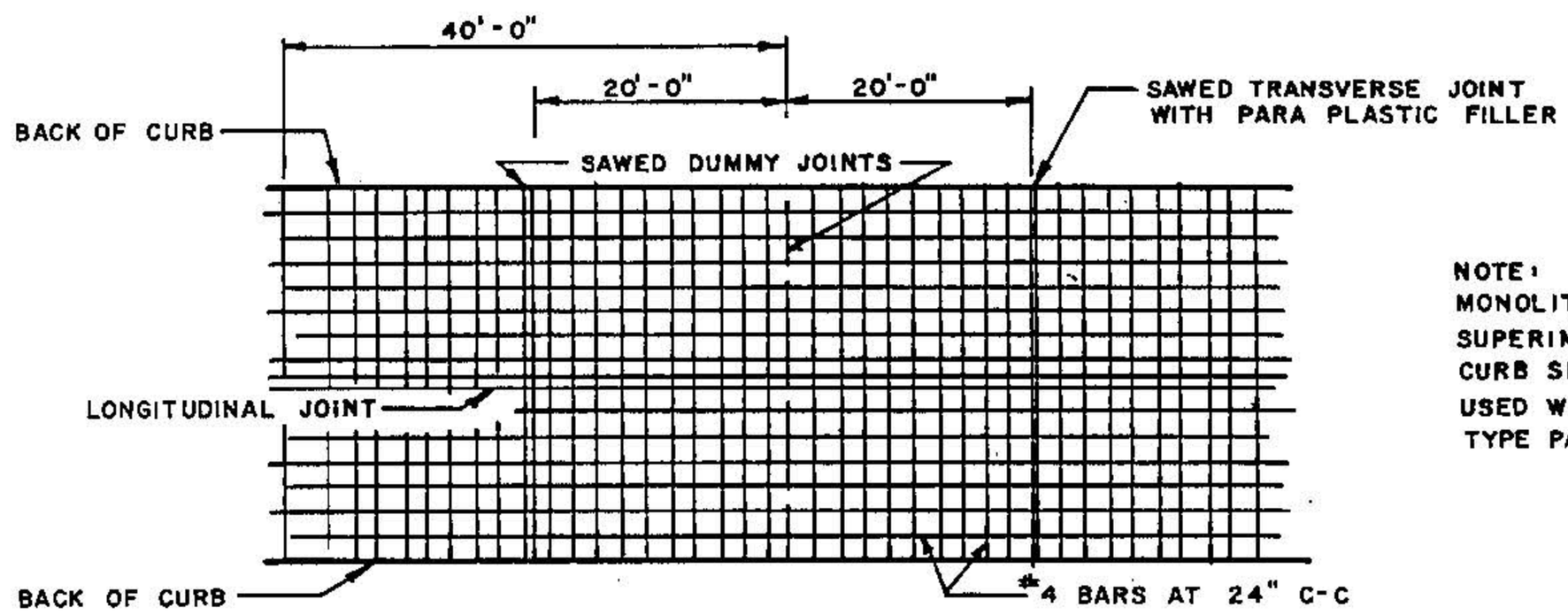

STEEL LAYOUT PLAN

NOTE: EITHER MONOLITHIC OR SUPERIMPOSED CURB SHALL BE USED WITH THIS TYPE PAVING.

CONSTRUCT SAWED DUMMY JOINTS AT 20' CENTERS. EXPANSION JOINTS TO BE AT INTERSECTIONS, BRIDGES AND OTHER STRUCTURES AND AT SPACINGS NOT TO EXCEED 40'. ALL JOINTS TO BE PROPERLY SEALED. A MANUALLY OPERATED SCREED EQUIPPED WITH A POWER VIBRATOR MAY BE USED IN COMBINATION WITH READY-MIXED CONCRETE.

PAVING FULL WIDTH SECTION SHALL BE PERMISSIBLE WHEN USING READY-MIX CONCRETE. HAND FINISH IS PERMISSIBLE WHEN THE PAVING QUANTITIES ARE SMALL (APPROXIMATELY ONE BLOCK OR LESS)

Scale:
NONE

FIGURE
R-2a

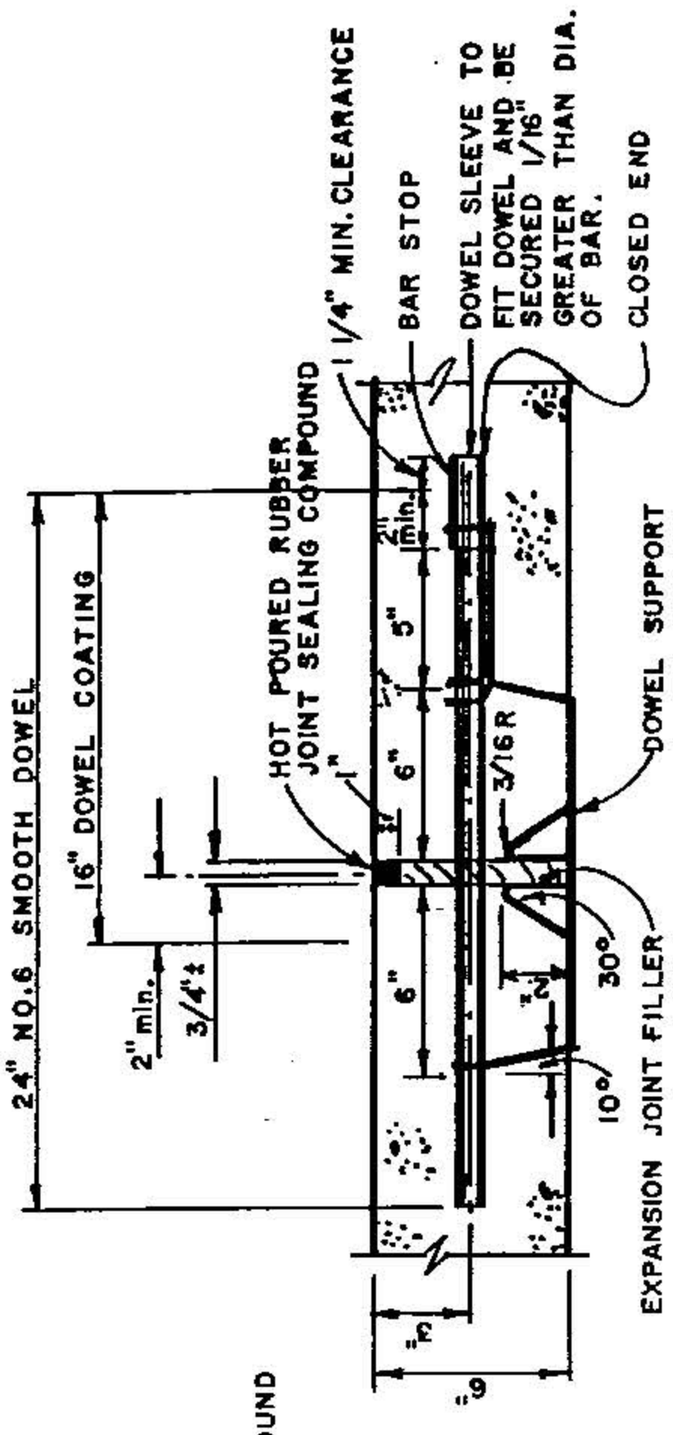

TRANSVERSE EXPANSION JOINT

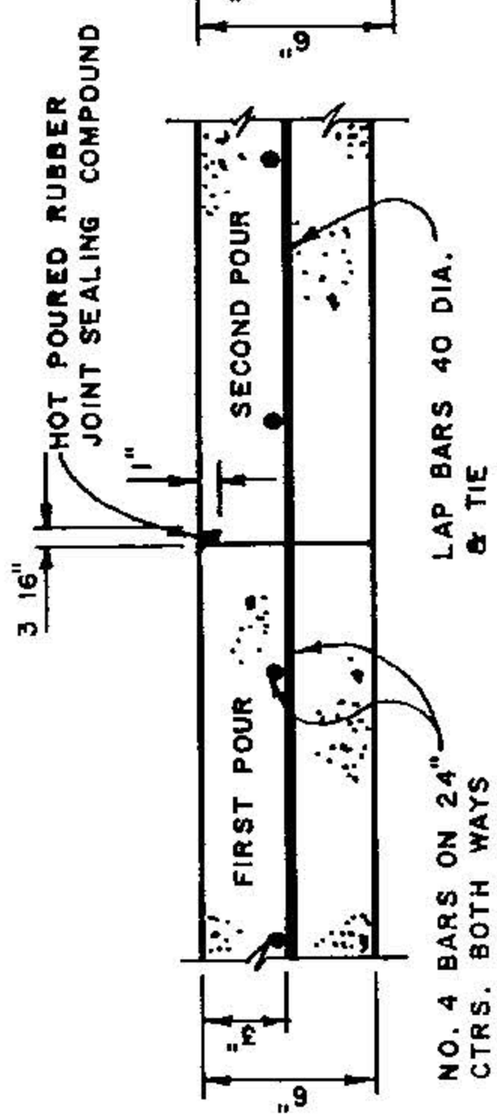

TRANSVERSE CONSTRUCTION JOINT

Not to Scale

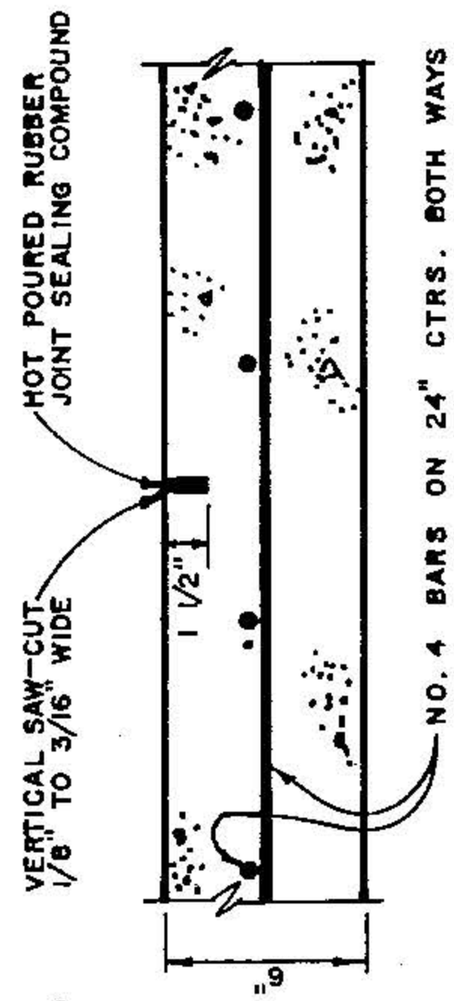

TRANSVERSE OR LONGITUDINAL SAWED DUMMY JOINT

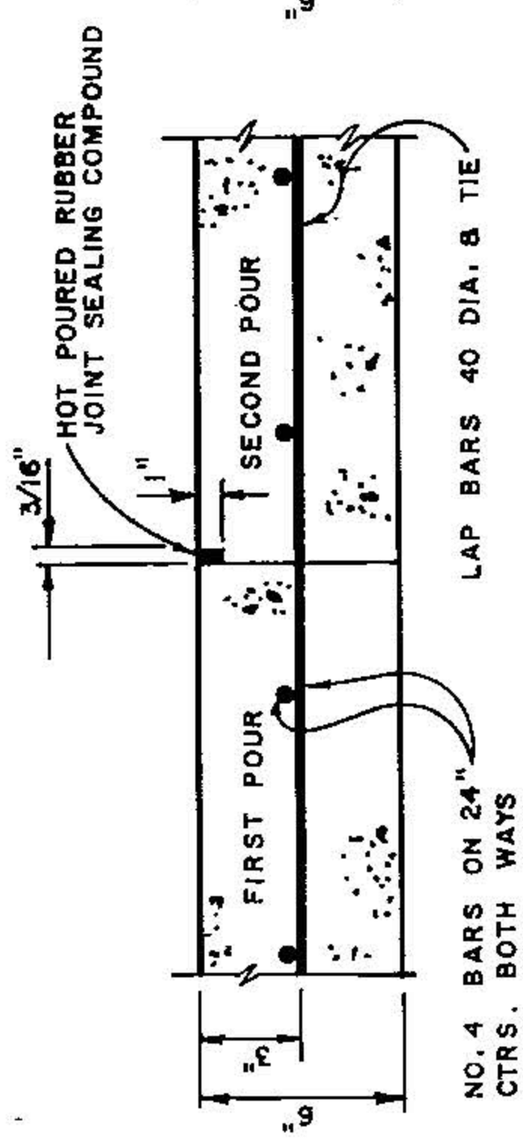

LONGITUDINAL CONSTRUCTION JOINT

Huntsville Design Criteria	TYPICAL RESIDENTIAL PAVING (CONCRETE)	Scale: NONE
Revisions		FIGURE R-2b

Huntsville
Design Criteria
Revisions

TYPICAL RESIDENTIAL PAVING
HOT MIX ASPHALTIC CONCRETE

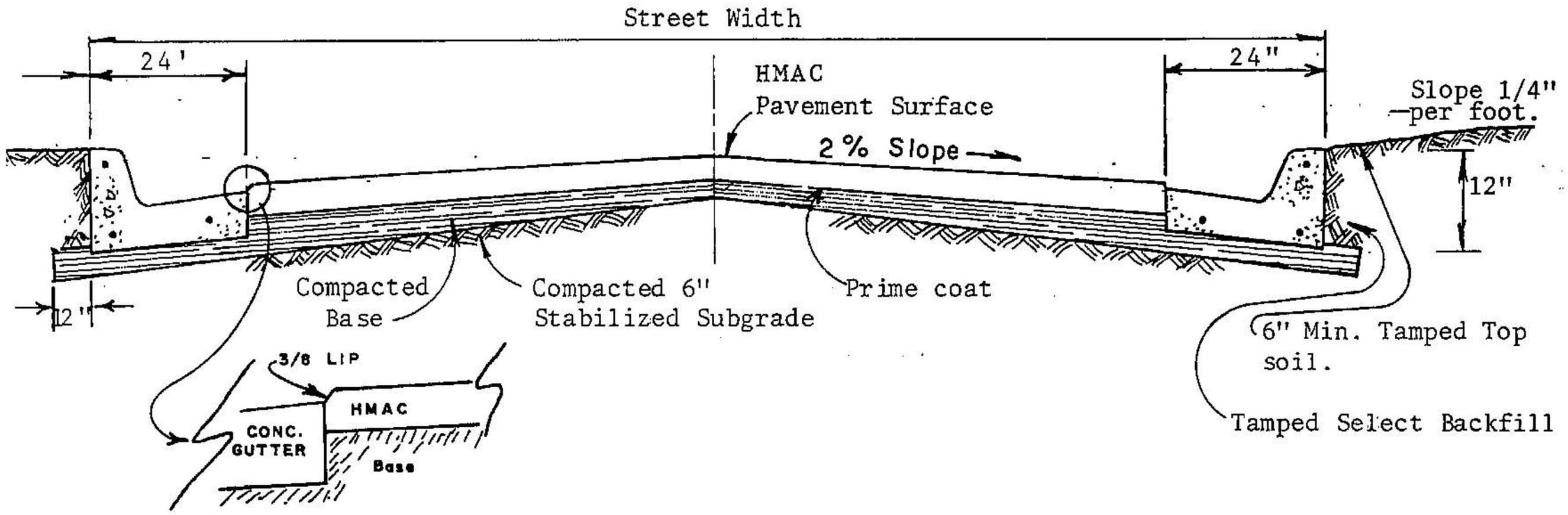

NOTES:

1. Pavement and Base Material thickness to be accordance with the City of Huntsville Subdivision Design Standards Manual.

2. Street width shall conform to City of Huntsville Subdivision Design Standards Manual.

3. Expansion joint in curb and gutter to be at bridges, intersections, and other structures, and at spacing not to exceed 38' ft. All joints to be properly sealed.

4. H. M. A. C. is Hot Mix Asphaltic Concrete. Use Type "D" per SDHPT Standard Specifictions Item 340.

Scale:
NONE

FIGURE
R - 3

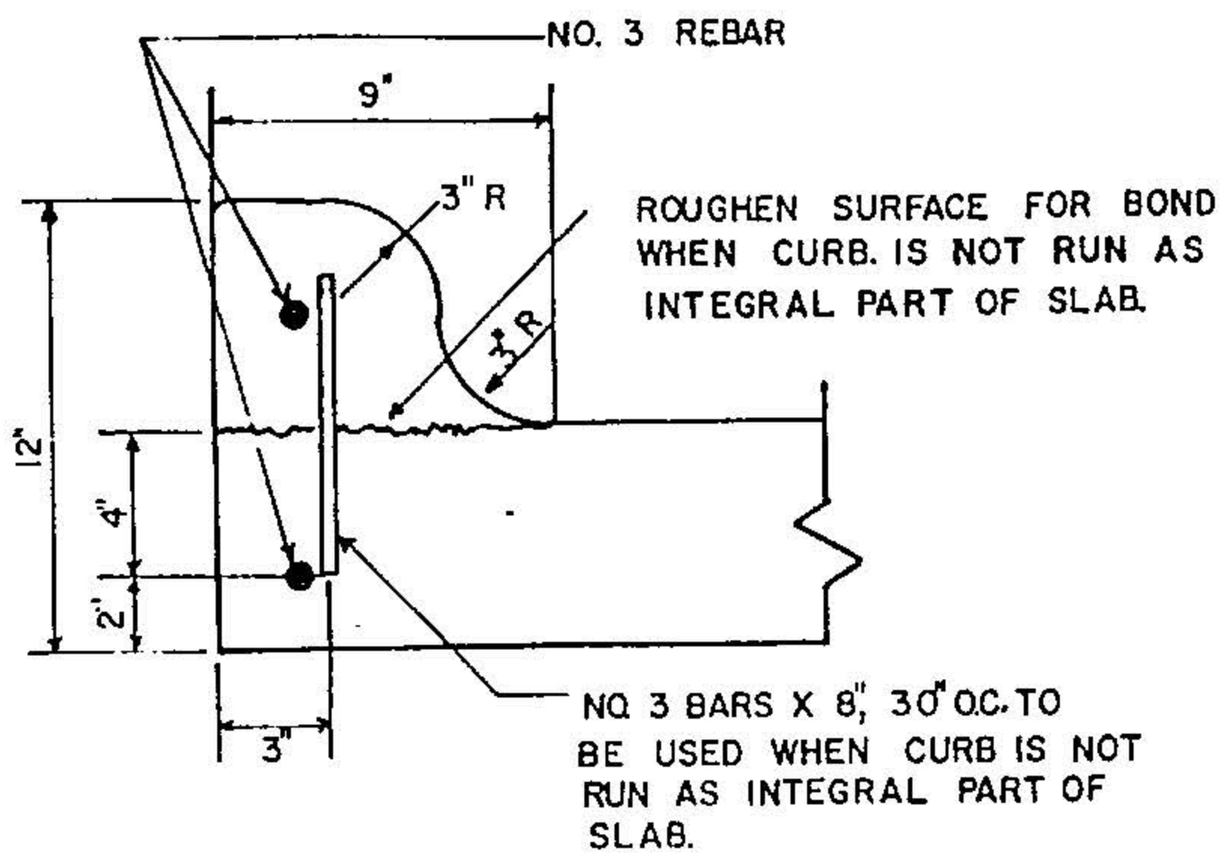

NOTES:

1. Place 1/2" expansion joint at each PC, PT, or minmun 38' O.C.
2. Use 3000 psi, Class "A" Concrete.
3. Stabilized subgrade may be 2-sack cement-stabilized sand, crushed rock or iron ore base material, as approved by the City Engineer.

* Shall be used to replace existing curb to match existing curb-only improvements.

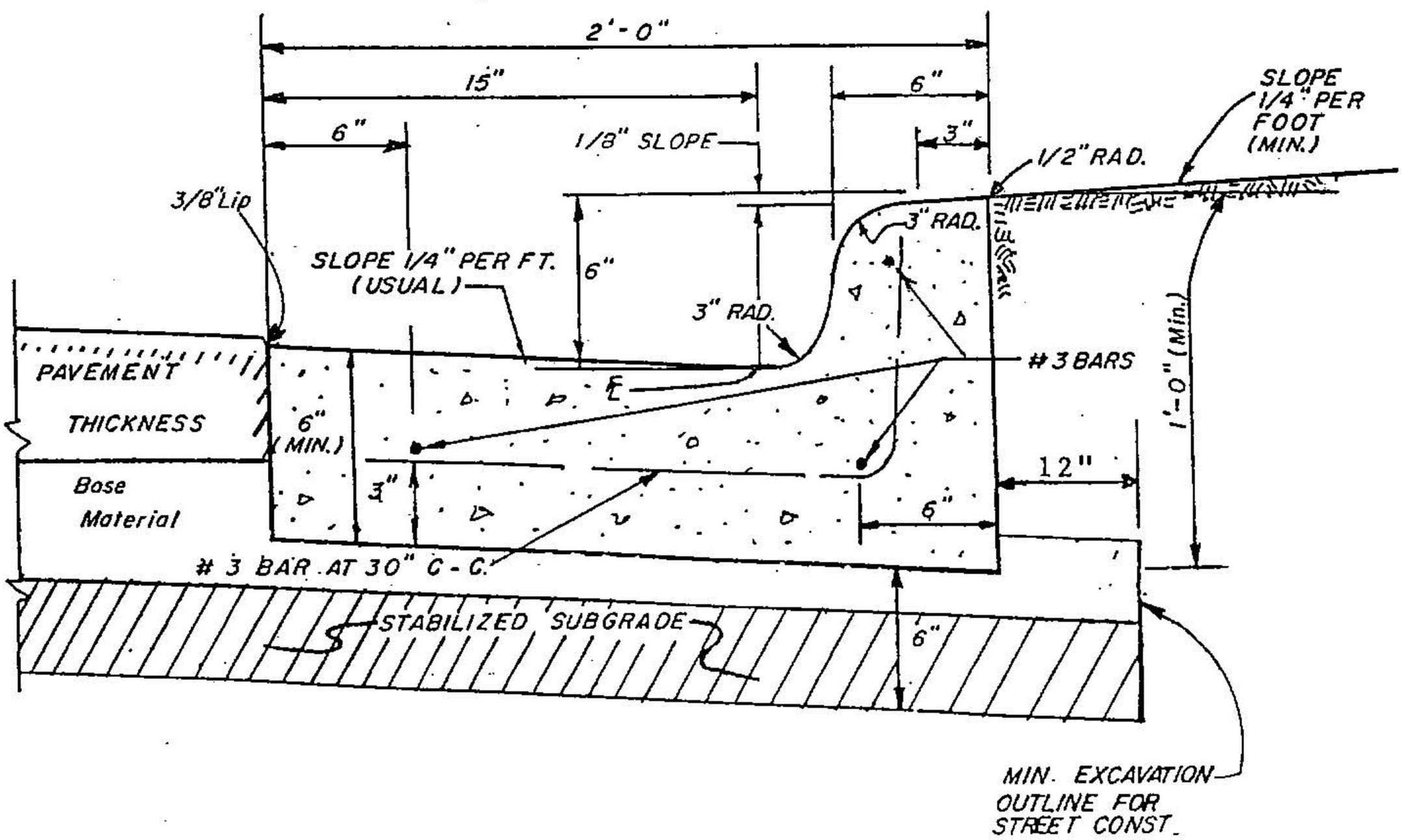

Huntsville Design Criteria	STANDARD CURB AND GUTTER	Scale: NONE
Revisions		FIGURE R-4

Type	R ft.	W, ft. Min.	W, ft. Max.
Residential Commercial	5 min.	12	30
One-Way	5 min.	20	40
Two-Way	10 min.	25	40

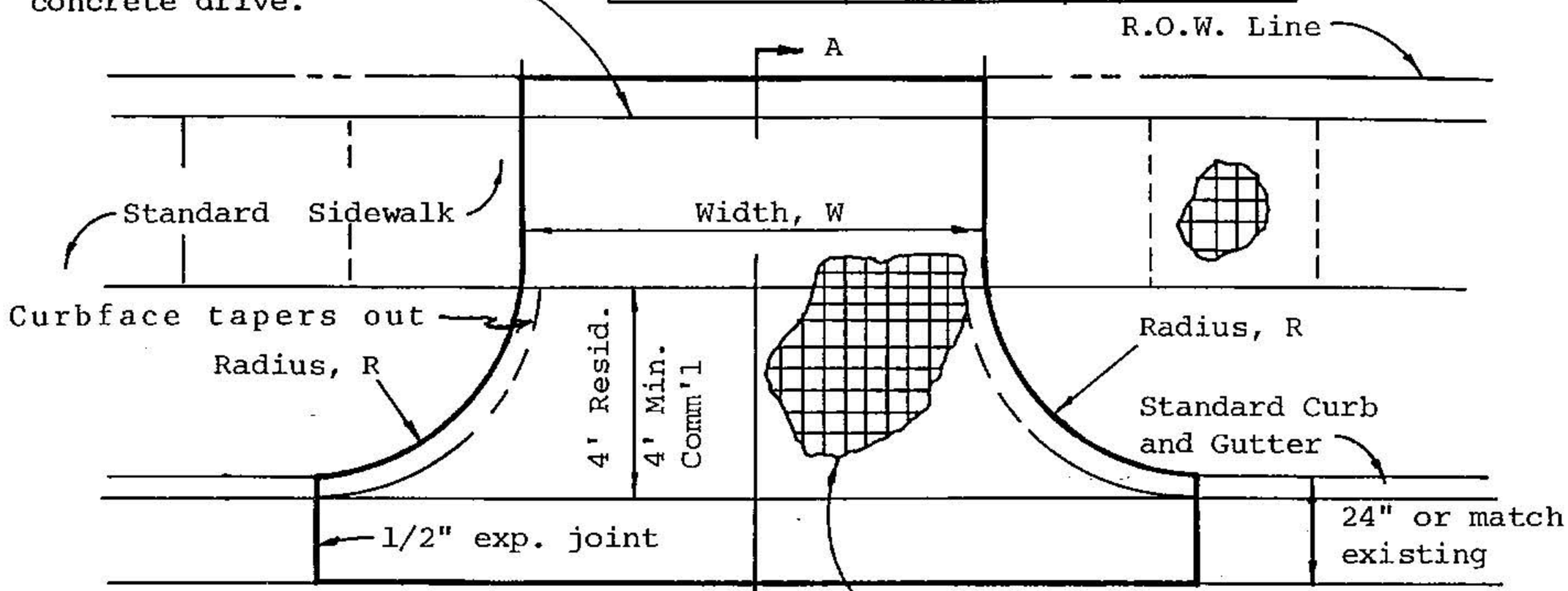

Sidewalk section thru driveway to be poured same thickness as driveway approach sloped at 1/4" per foot, existing sidewalk to be removed and replaced.

Plan View

Reinforced 6" drive with 6" x 6" No. 6 wire mesh or #3 bars at 18" C-C for residential drives or #4 bars at 12" C-C for commercial drives. Concrete to be Class A, 3000 psi.

Neat break line in gutter. The surface to be rough, epoxy bonding agent applied and proper construction methods followed.

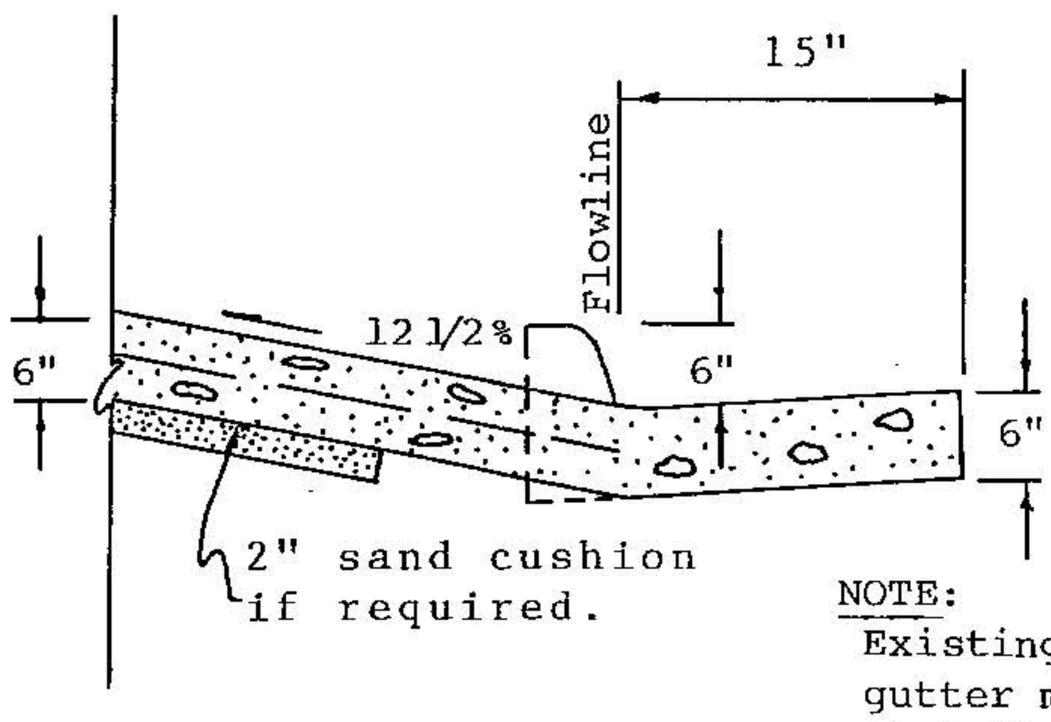

SECTION A-A

New Curb

And Gutter

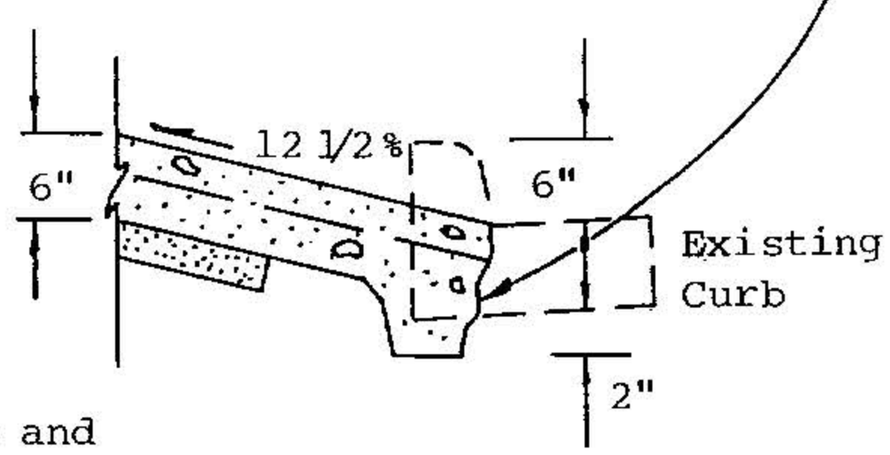

NOTE:
Existing curb and gutter must be sawcut at following locations:
1. Along gutter flowline
2. One (1) foot beyond drive approach radius point for removals.

SECTION A-A

Existing Curb

And Gutter

Huntsville Design Criteria	DRIVEWAYS	Scale: NONE
Revisions		FIGURE R-5

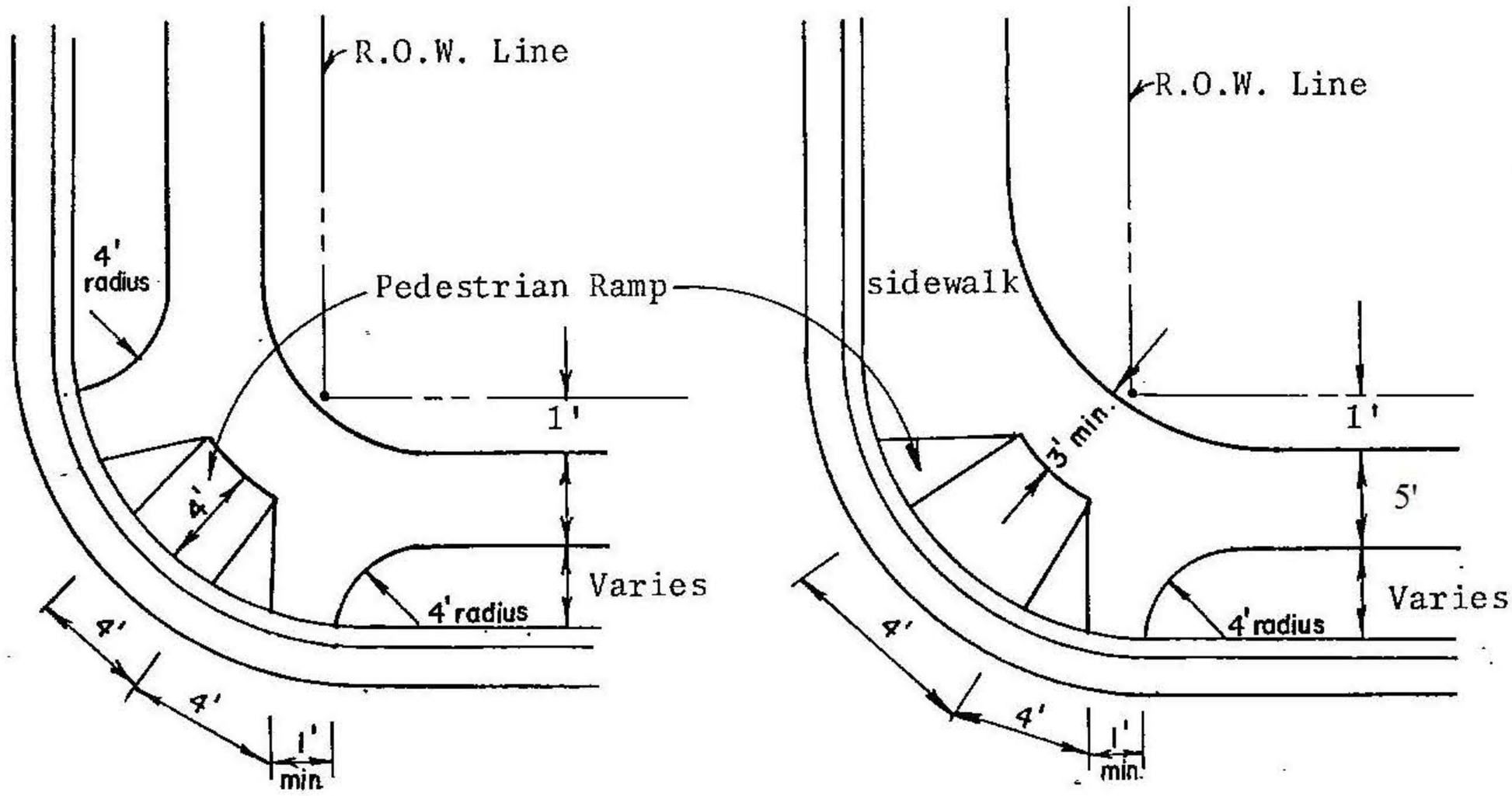

DETAIL A

Two intersecting sidewalks are split from curb.

DETAIL B

One intersecting sidewalk is split from curb.

NOTES:
1. For sidewalk details see Standard Drawing.
2. Back of sidewalk radius to be reduced in order to avoid encroachment on private property in those instances where the property lines are extended.
3. Maximum slope of ramp shall be 12.5%.
4. Ramps shall not conflict with curb inlets.
5. Ramps shall be rough broom finished transverse to slope.

Huntsville Design Criteria	SIDEWALK AND PEDESTRIAN RAMP TREATMENT	Scale: NONE
Revisions		FIGURE R-6

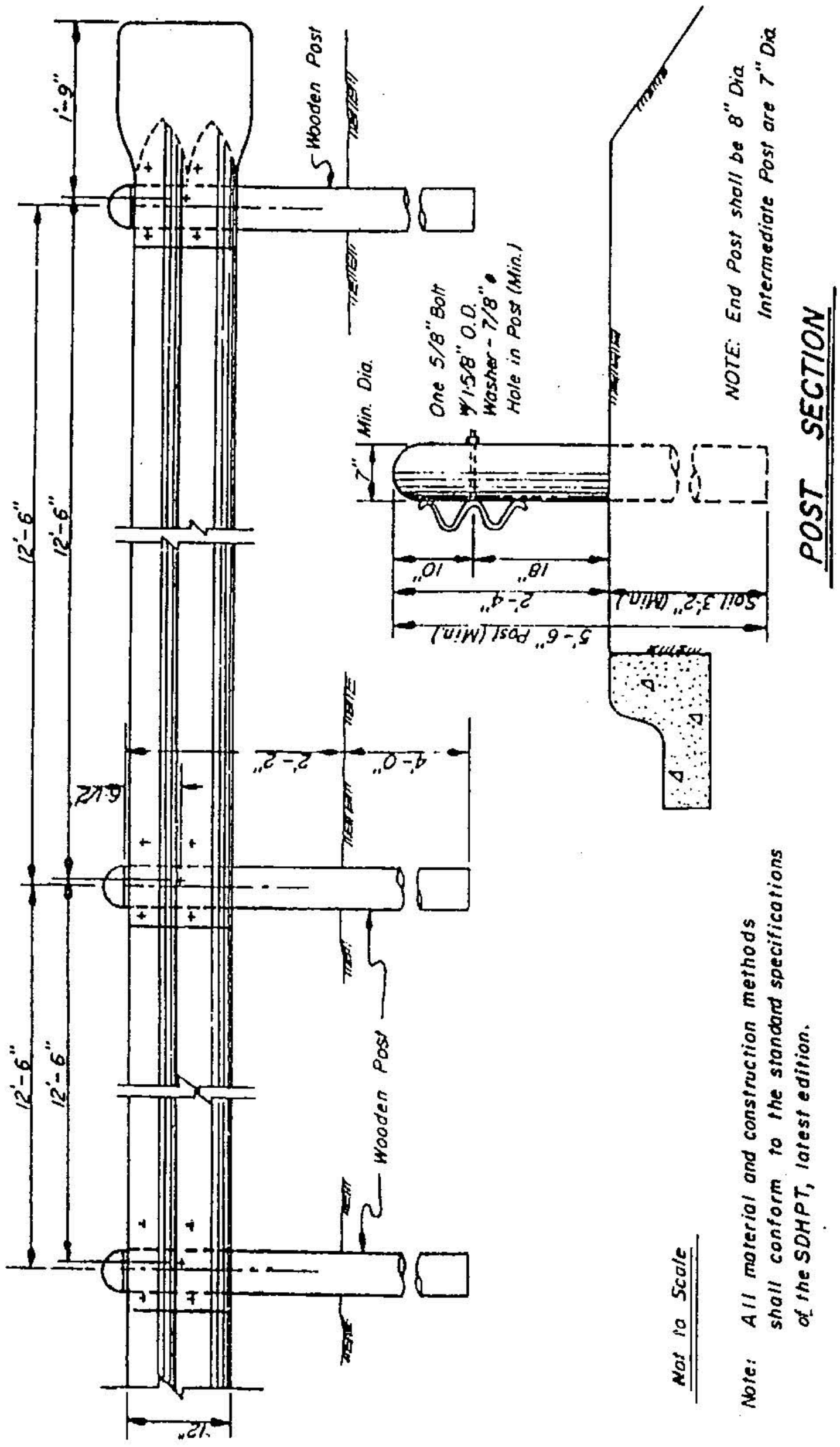

Not to Scale

Note: All material and construction methods shall conform to the standard specifications of the SDHPT, latest edition.

Huntsville Design Criteria	STEEL GUARD RAIL	Scale: NONE
Revisions		FIGURE R-7

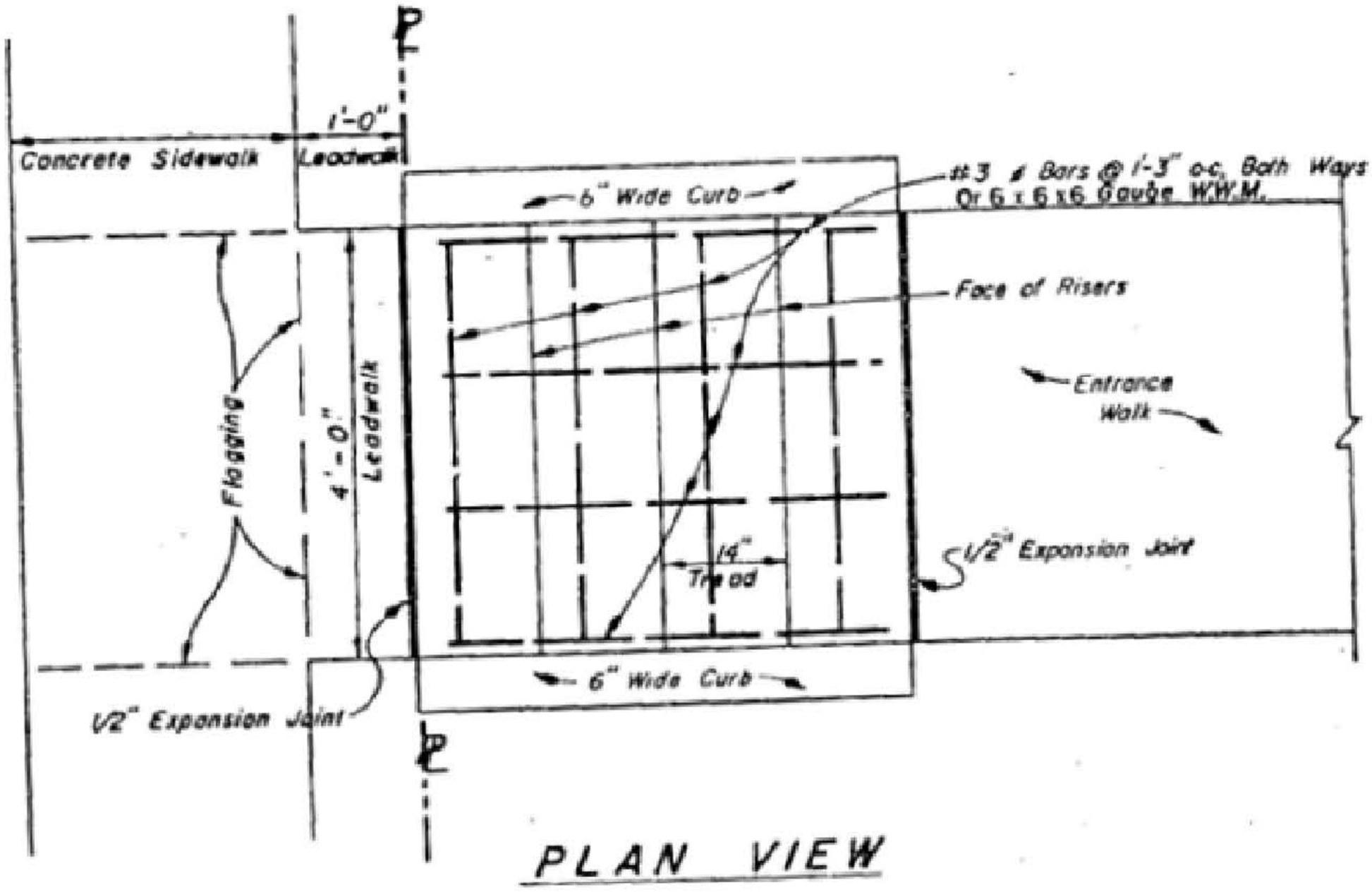

PLAN VIEW

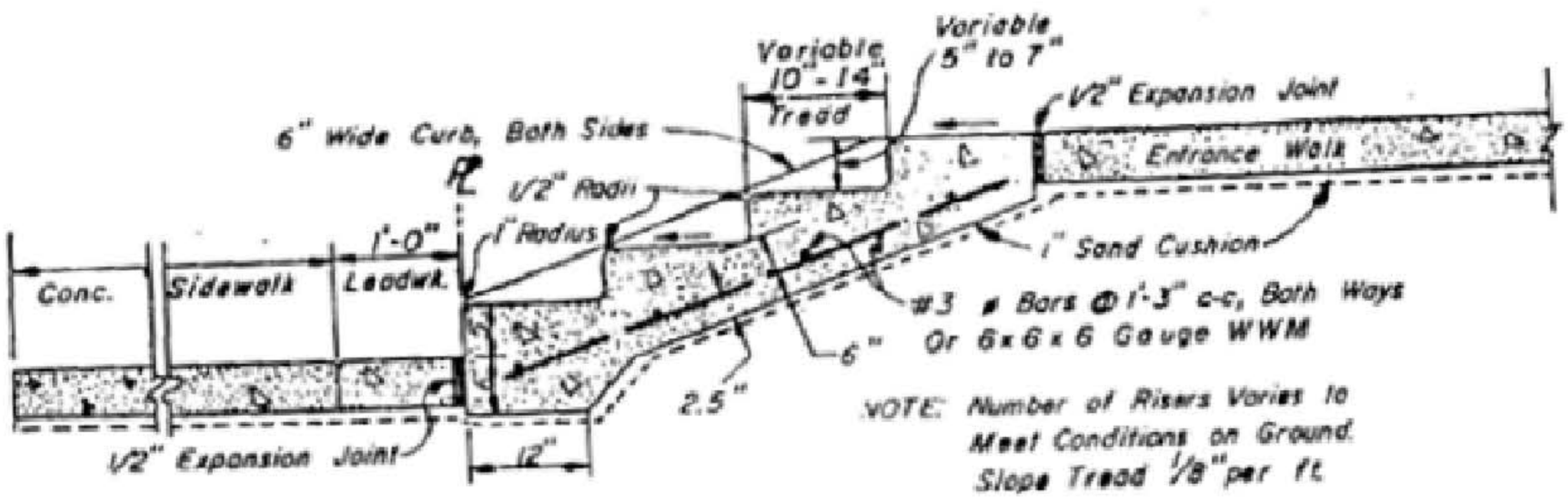

SECTION VIEW

Huntsville Design Criteria	**CONCRETE STEPS**	Scale: NONE
Revisions		FIGURE R-8

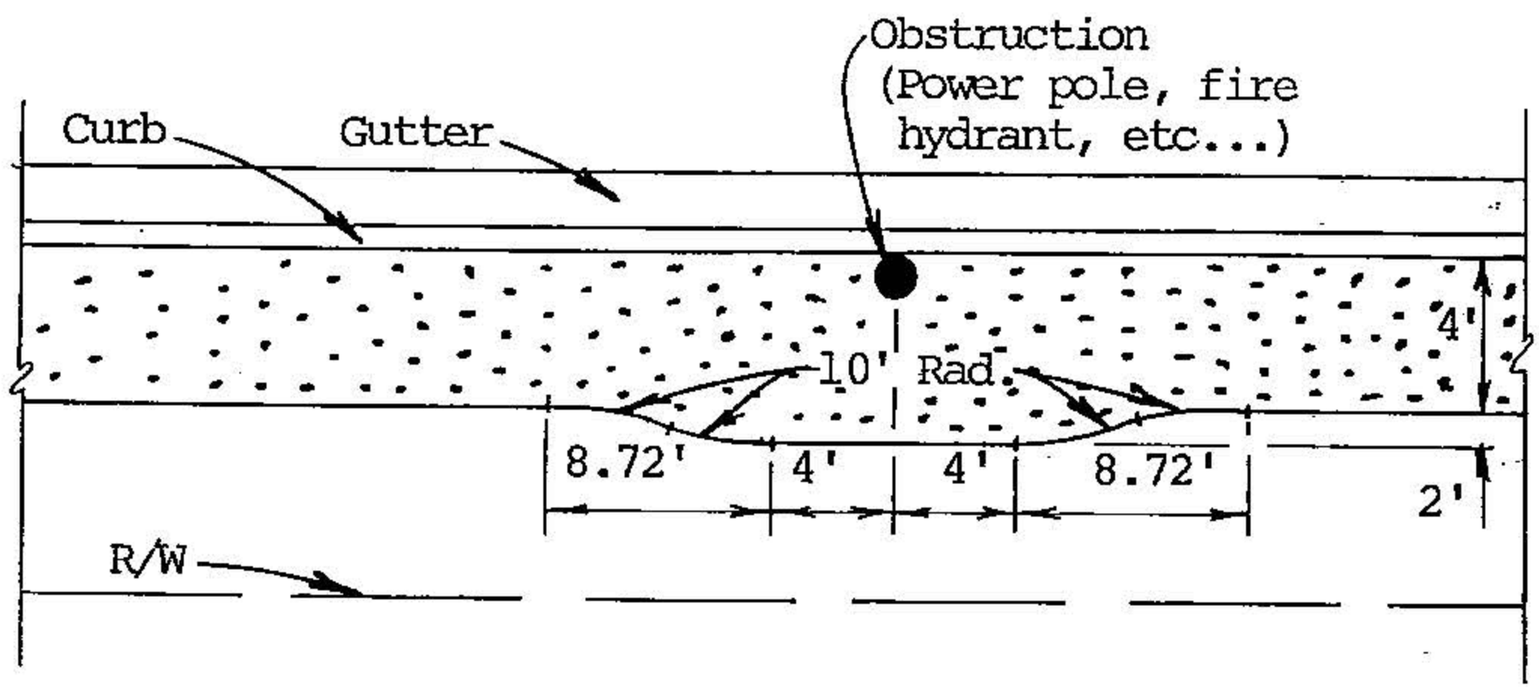

Huntsville Design Criteria	TYPICAL SIDEWALK OBSTRUCTION TRANSITION	Scale: NONE
Revisions		FIGURE R-9

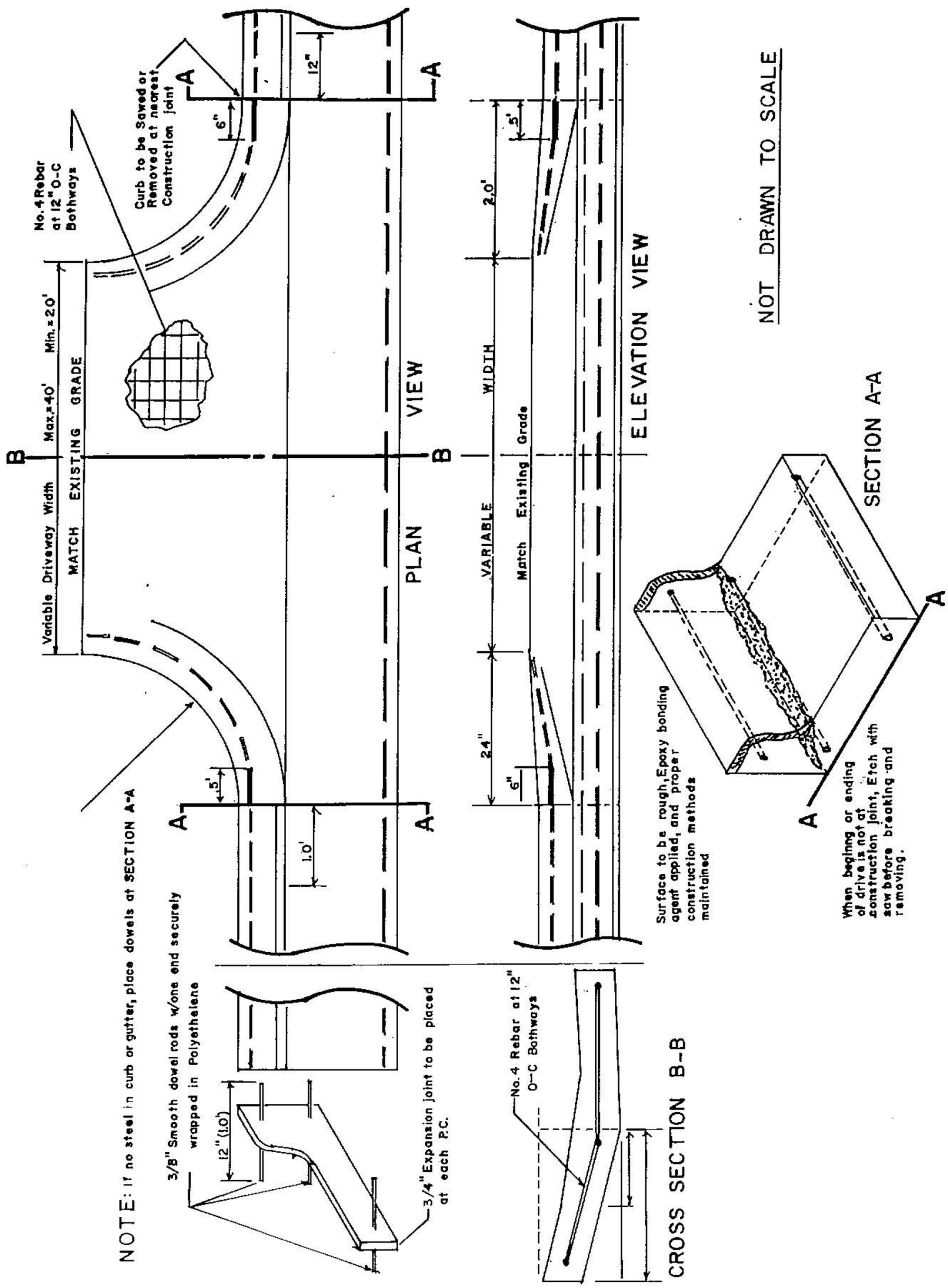

Huntsville Design Criteria	STANDARD COMMERCIAL DRIVEWAY DETAIL	Scale: NONE
Revisions		FIGURE R-10

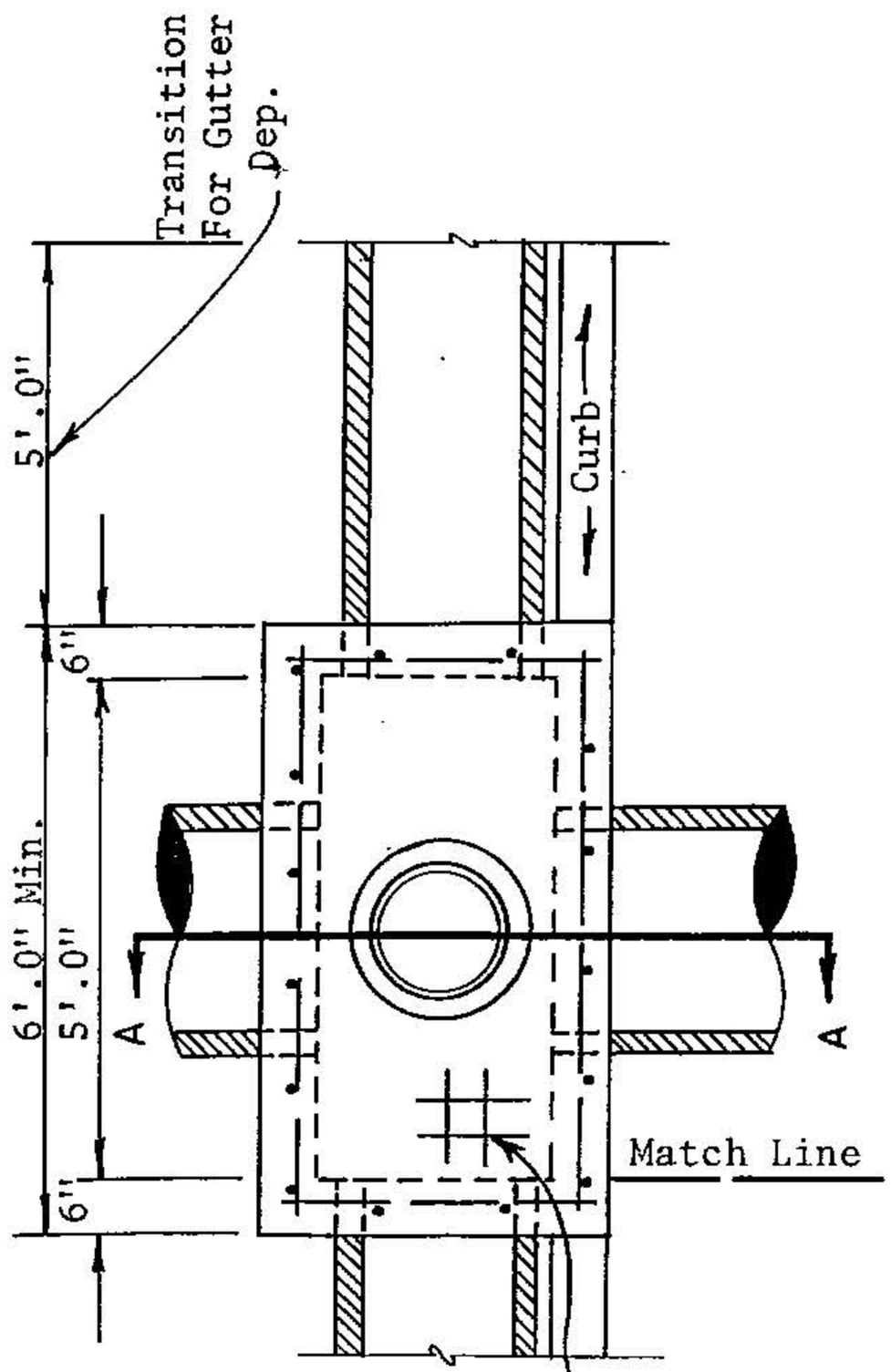

CURB INLET PLAN VIEW

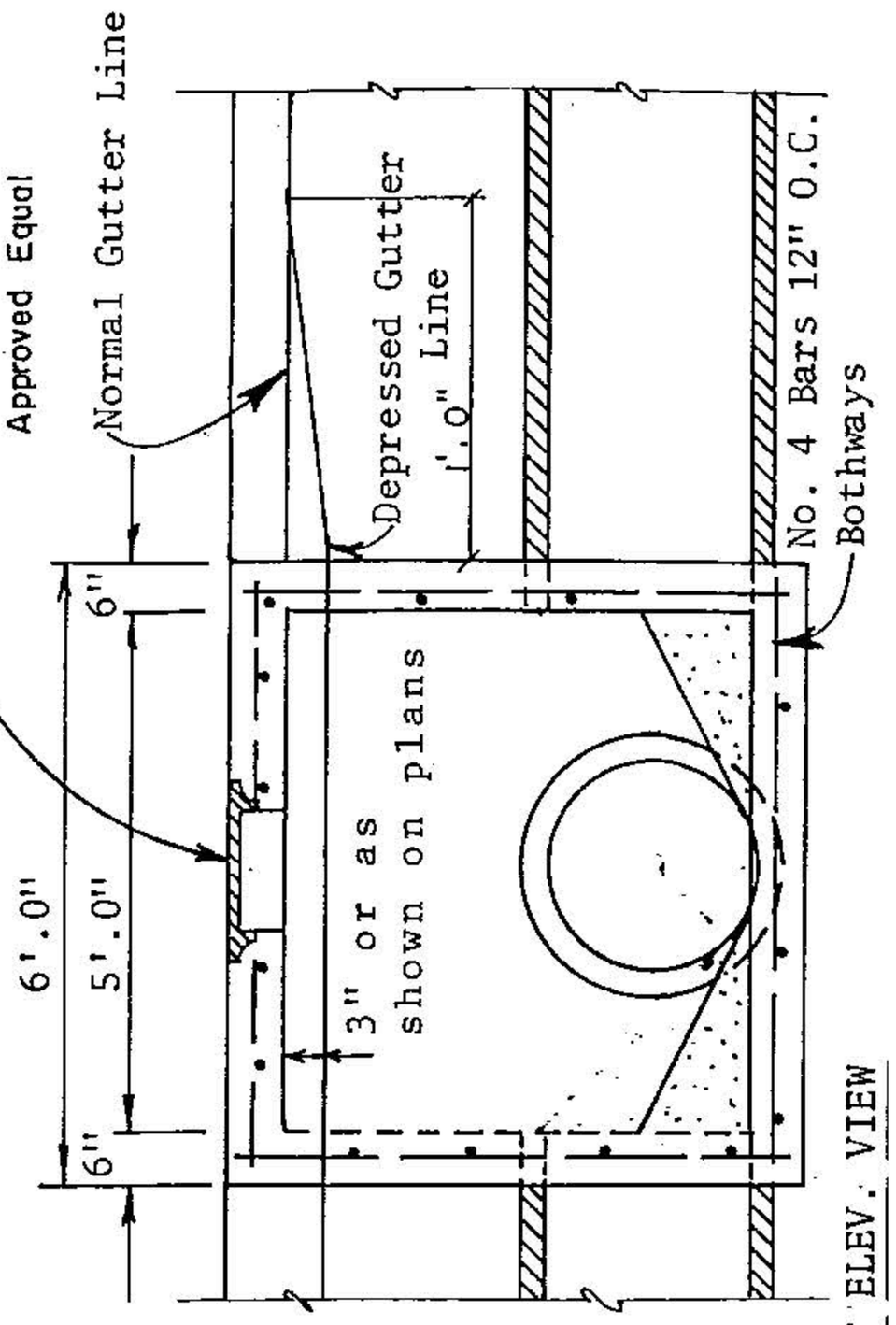

CURB INLET ELEV. VIEW

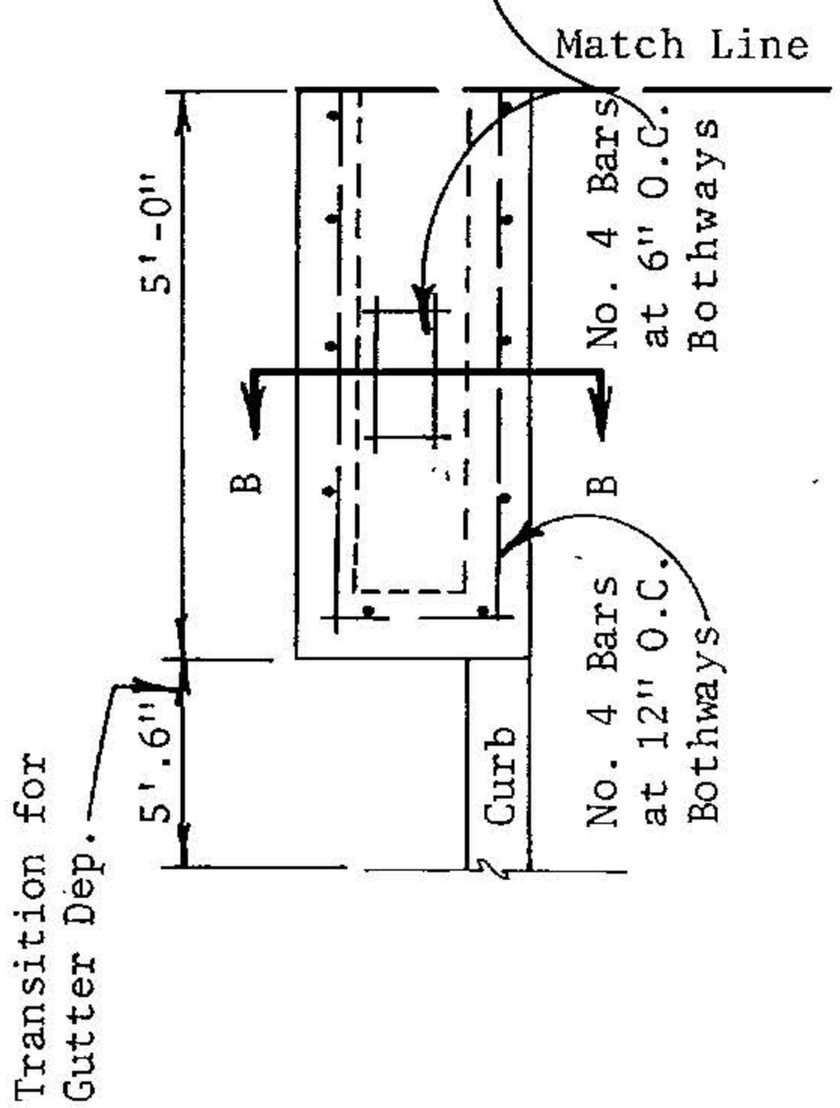

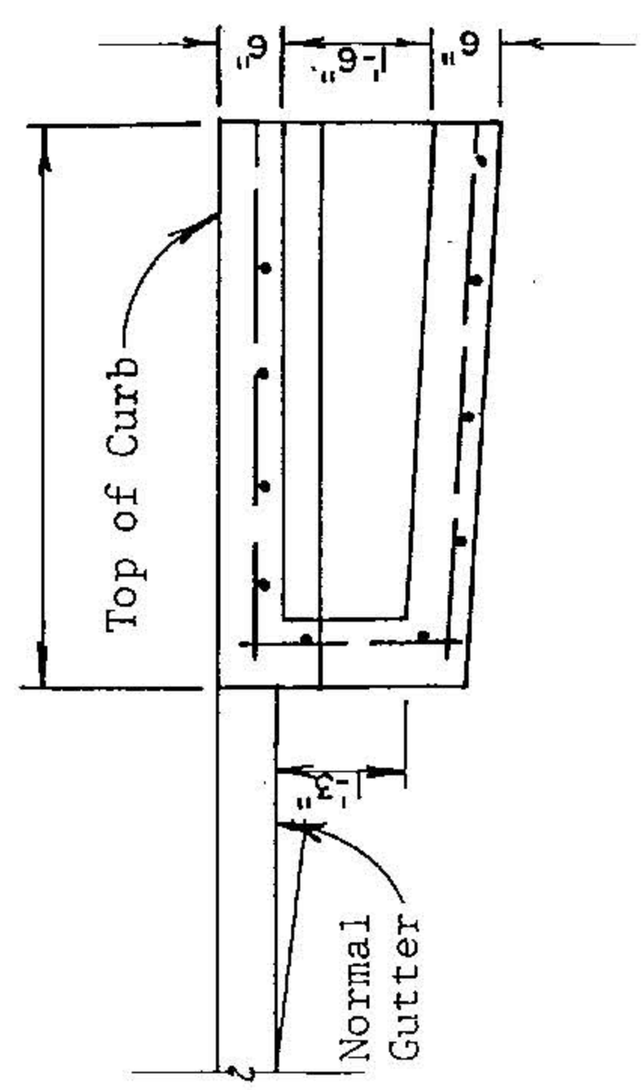

NOTE:
Concrete shall be 2,000 psi, Class "B"

Huntsville Design Criteria	STANDARD STORM DRAIN CURB INLET	Scale: NONE
Revisions		FIGURE D-1

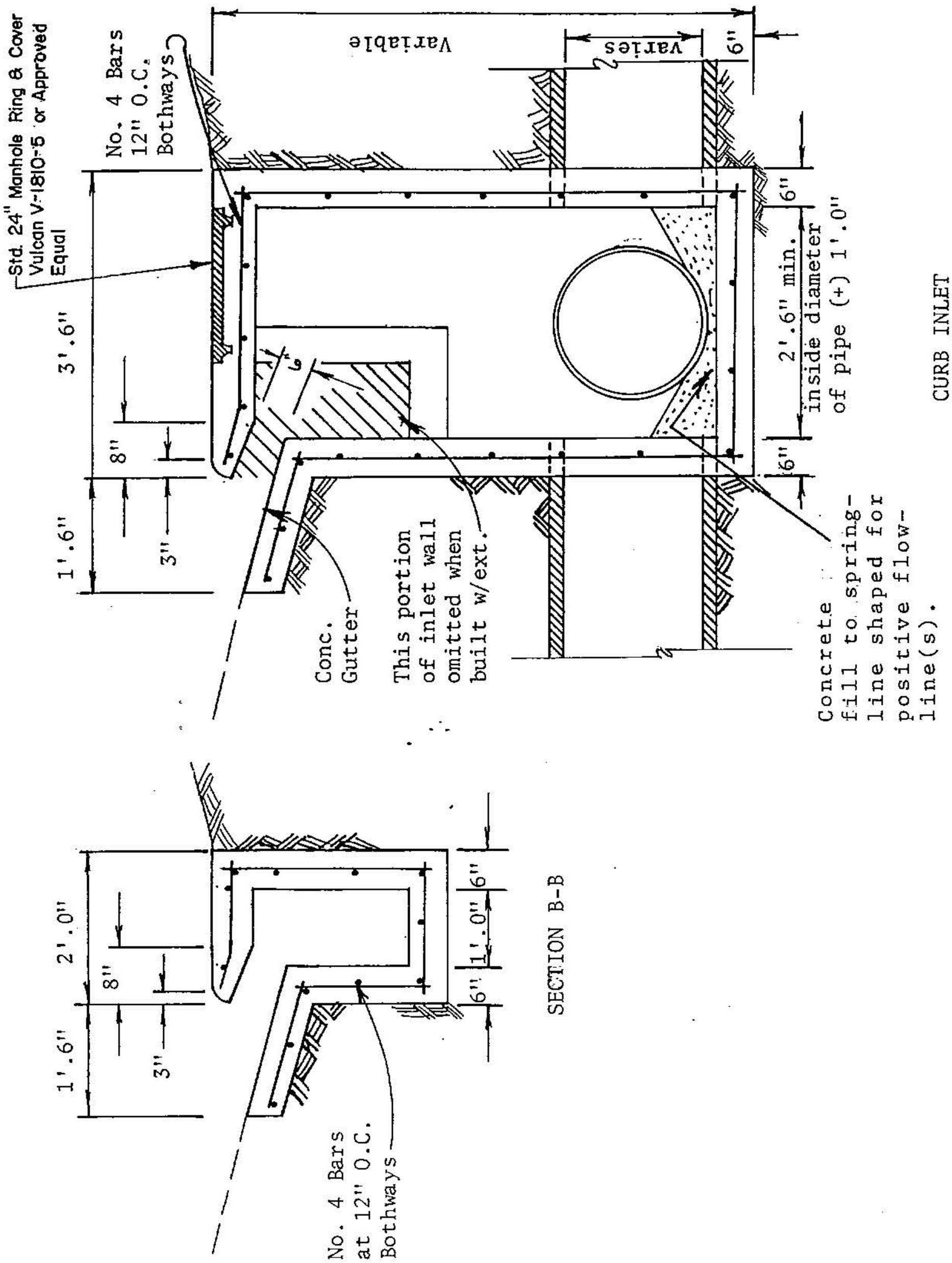

Huntsville Design Criteria	STANDARD STORM DRAIN CURB INLET	Scale: NONE
Revisions		FIGURE D-2

Huntsville
Design Criteria
Revisions

STANDARD DROP INLET

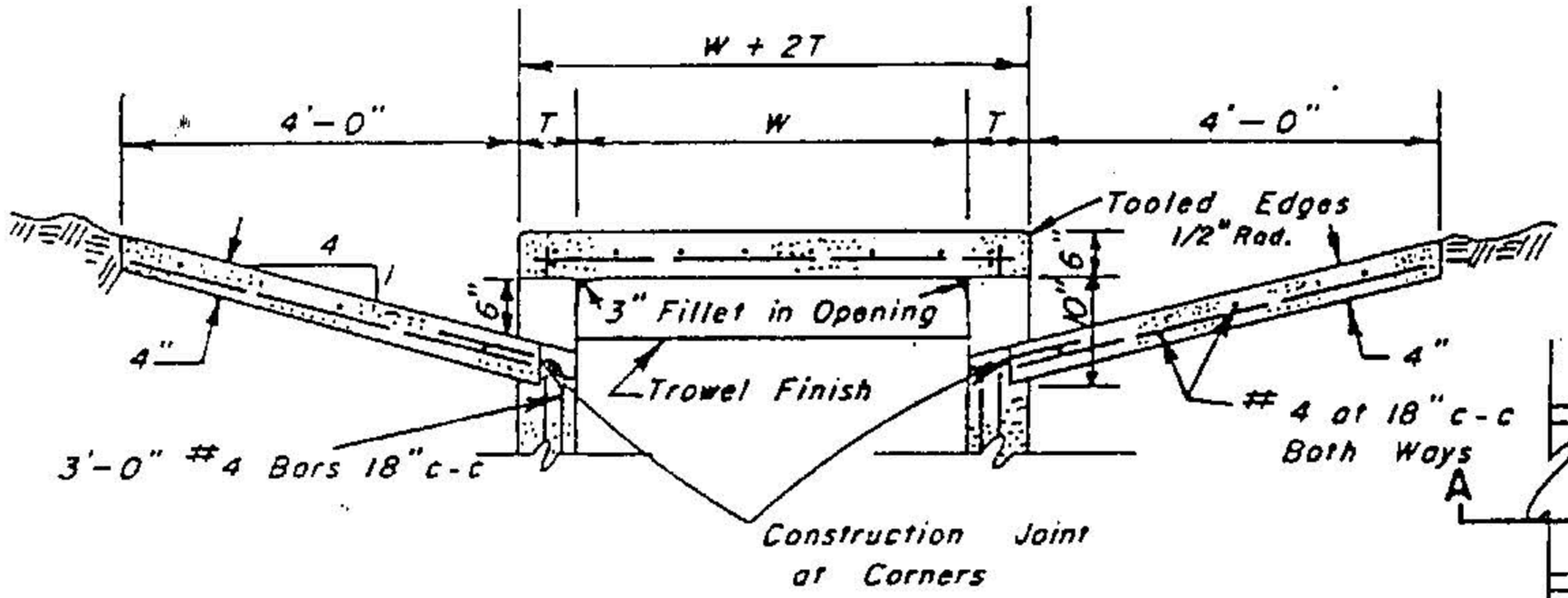

SECTION A-A

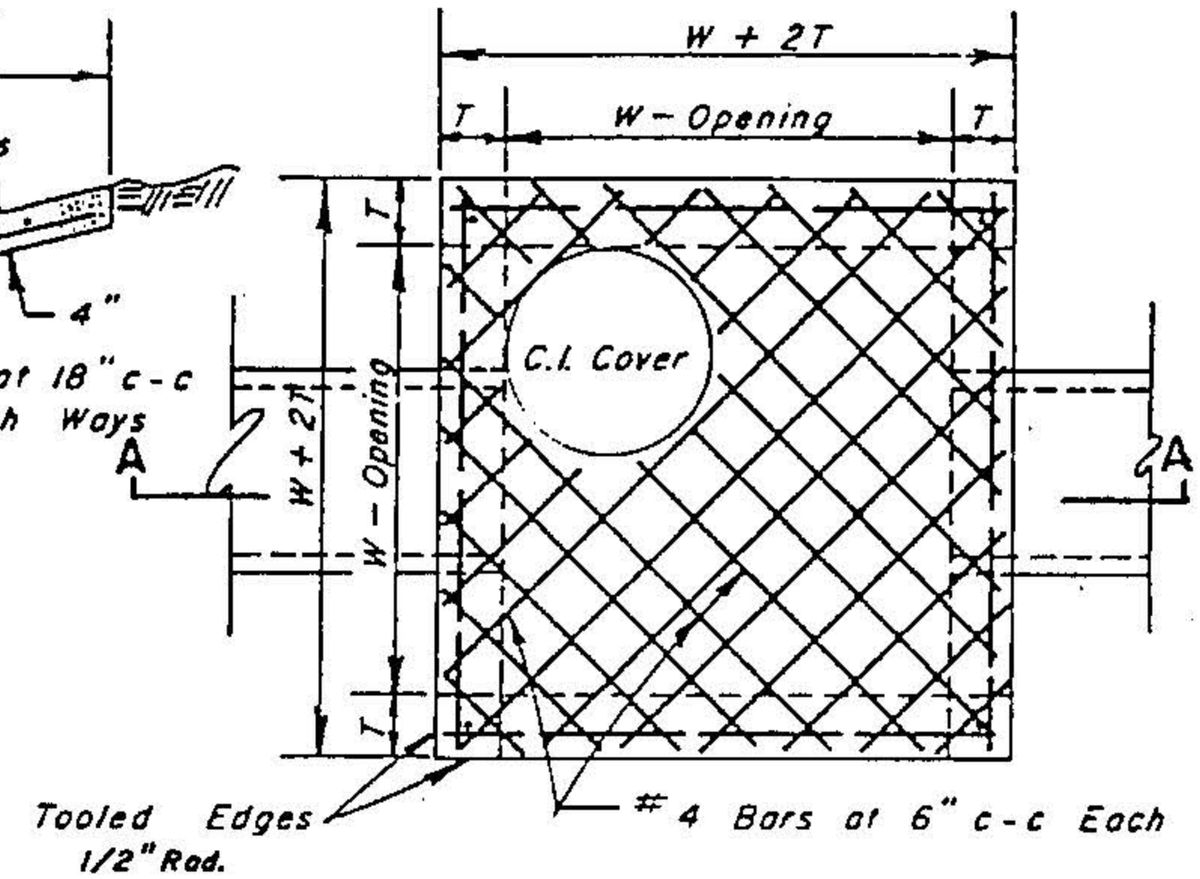

GENERAL NOTES:

1. Material and Workmanship Shall Conform With The Requirements of Standard Specifications for Standard Concrete Manholes.
2. Layers of Reinforced Steel Nearest the Interior and Exterior Surfaces Shall Have A Cover of 2" to the Center of Bars, Unless Otherwise Noted.
3. Excavation for Drop Inlet to be Included in the Unit Price Bid for Drop Inlet.
4. For Details of Reinforcing of Lower Portions of Inlet See Appropriate Square Manhole Details.
5. Depth of Drop Inlet From Finished Grade to Flow Line of Inlet is Variable. Approximate Depth Will Be Shown on Plans at Location of Inlet.
6. All Standard Drop Inlets Shall Have One Opening on Each Side Unless Shown on Plans.
7. Deck May Be Reinforced Same As Standard Square Storm Drain Manhole
8. Cast Iron Frame and Cover stamped "Stom Drain" (See Std Dwg D-7)

INLET SIZE	T	W
2' SQUARE	7"	2'-0"
4' SQUARE	7"	4'-0"
5' SQUARE	8"	5'-0"
6' SQUARE	9"	6'-0"
7' SQUARE	9"	7'-0"
8' SQUARE	9"	8'-0"

For Lower Portion of 2' Square Drop Inlet Use Reinf. Steel Details of 4' Square Manhole and Eliminate Inlet Ring and Cover.

Scale:
NONE

FIGURE
D-3

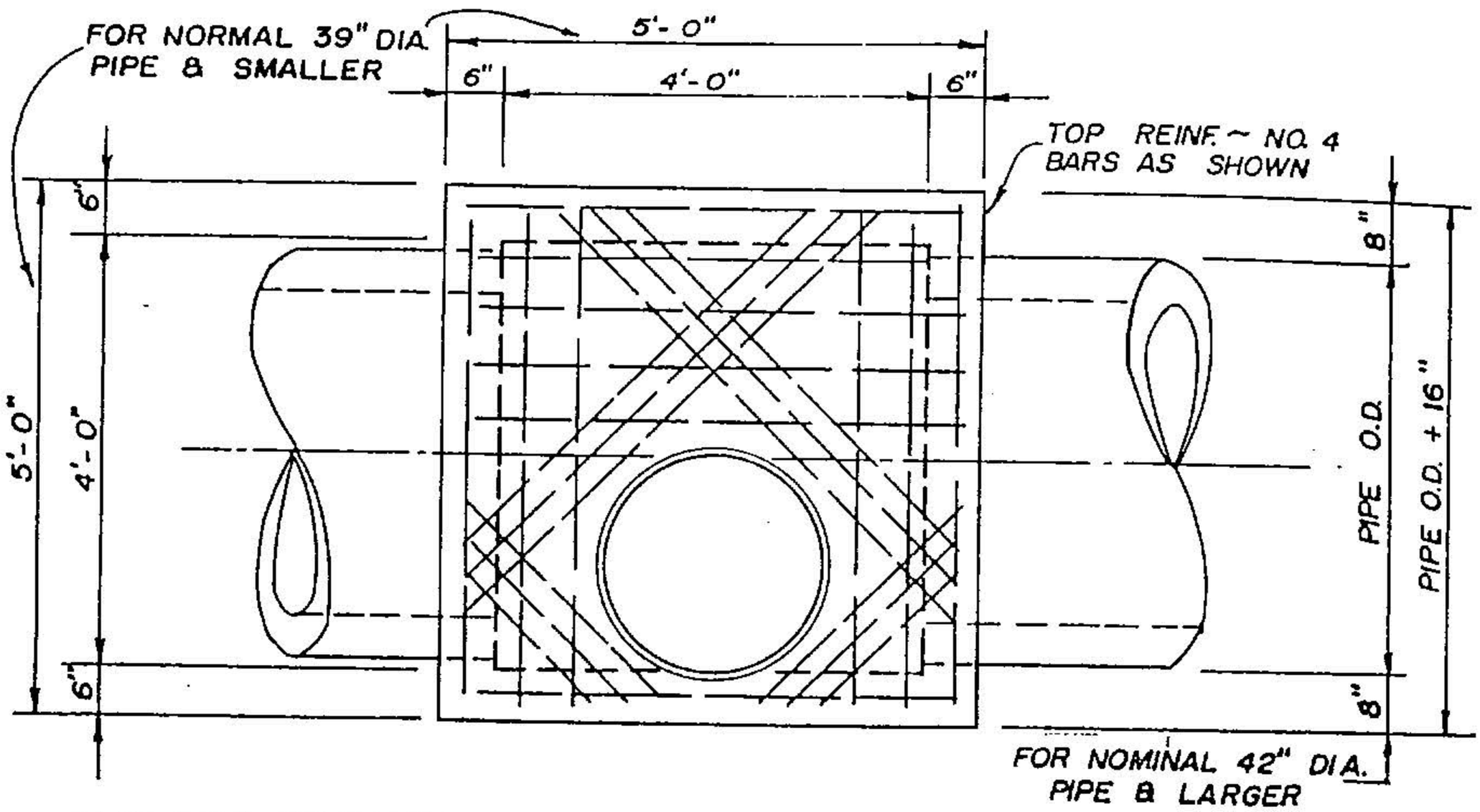

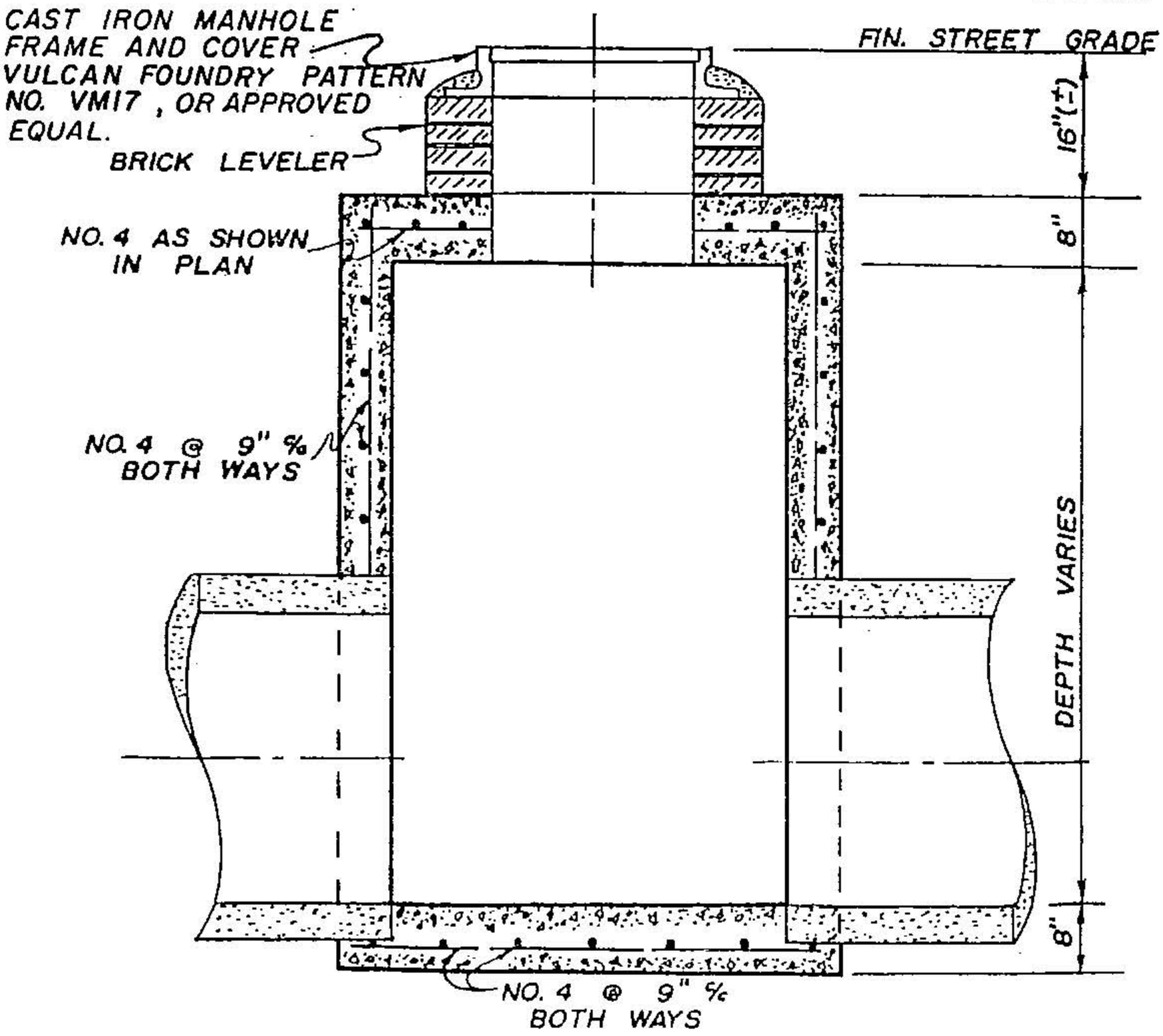

Huntsville Design Criteria	STANDARD SQUARE STORM DRAIN MANHOLE	Scale: NONE
Revisions		FIGURE D - 4

Storm Sewer Manhole Cover

Heavy Duty
Ductile Iron (70-50-05)

ASTM A536

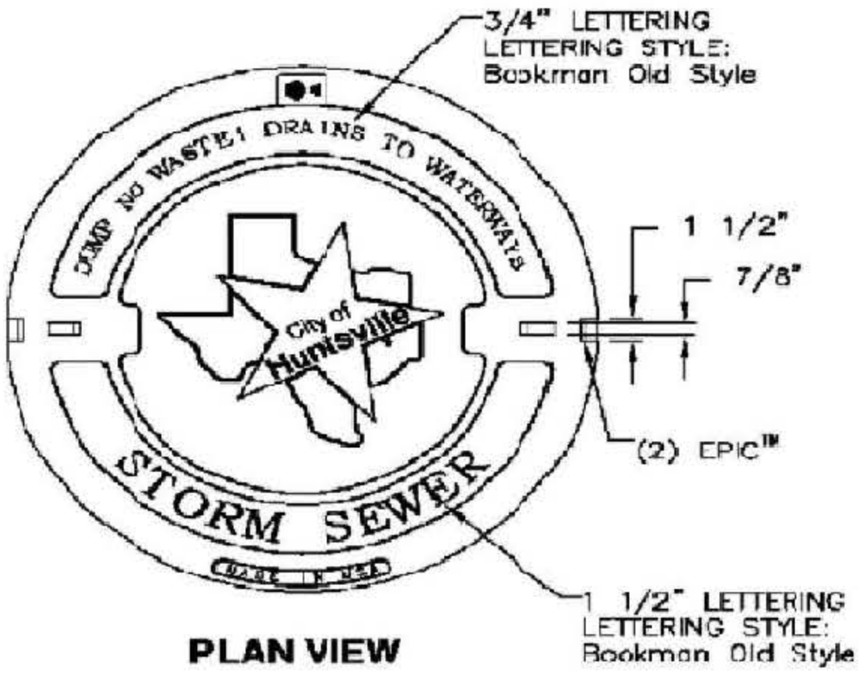

PLAN VIEW

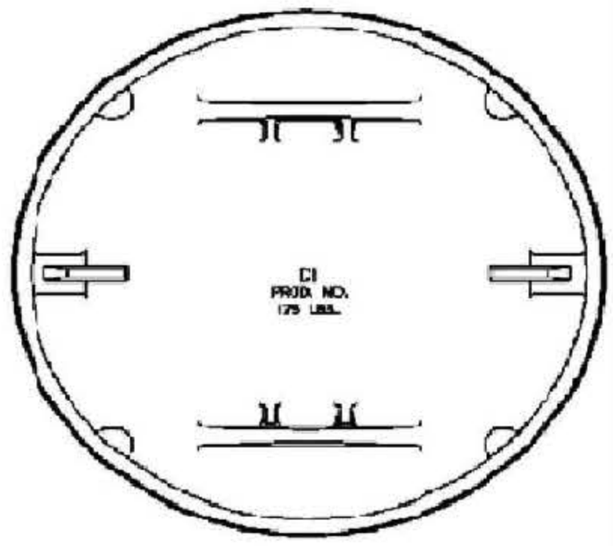

BOTTOM VIEW

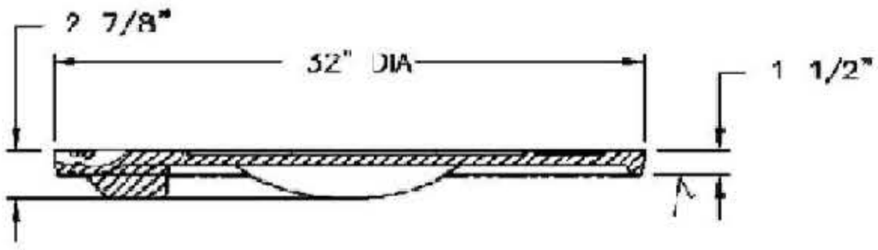

CROSS SECTION

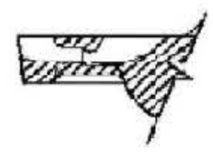

EPIC™ PICKBAR

Storm Sewer Manhole

Manhole to be precast conc., cast in place, or fiberglass construction (Owens-Corning 40,000 psi or approved equal)

(The interior of all manholes shall have a protective coating. This coating shall be as described in the following or shall be an alternate coating providing the same or better level of protection as the specified coating. The interior manhole coating shall consist of a heavy coat modified Polyamine Epoxy (Tnemec Series 435 Perma-Glaze or accepted equivalent) applied in strict accordance with manufacturer's recommendations. Minimum total dry film thickness for 4' diameter manhole shall be 15 mils. Minimum total dry film thickness for wet wells shall be 60 mils.)

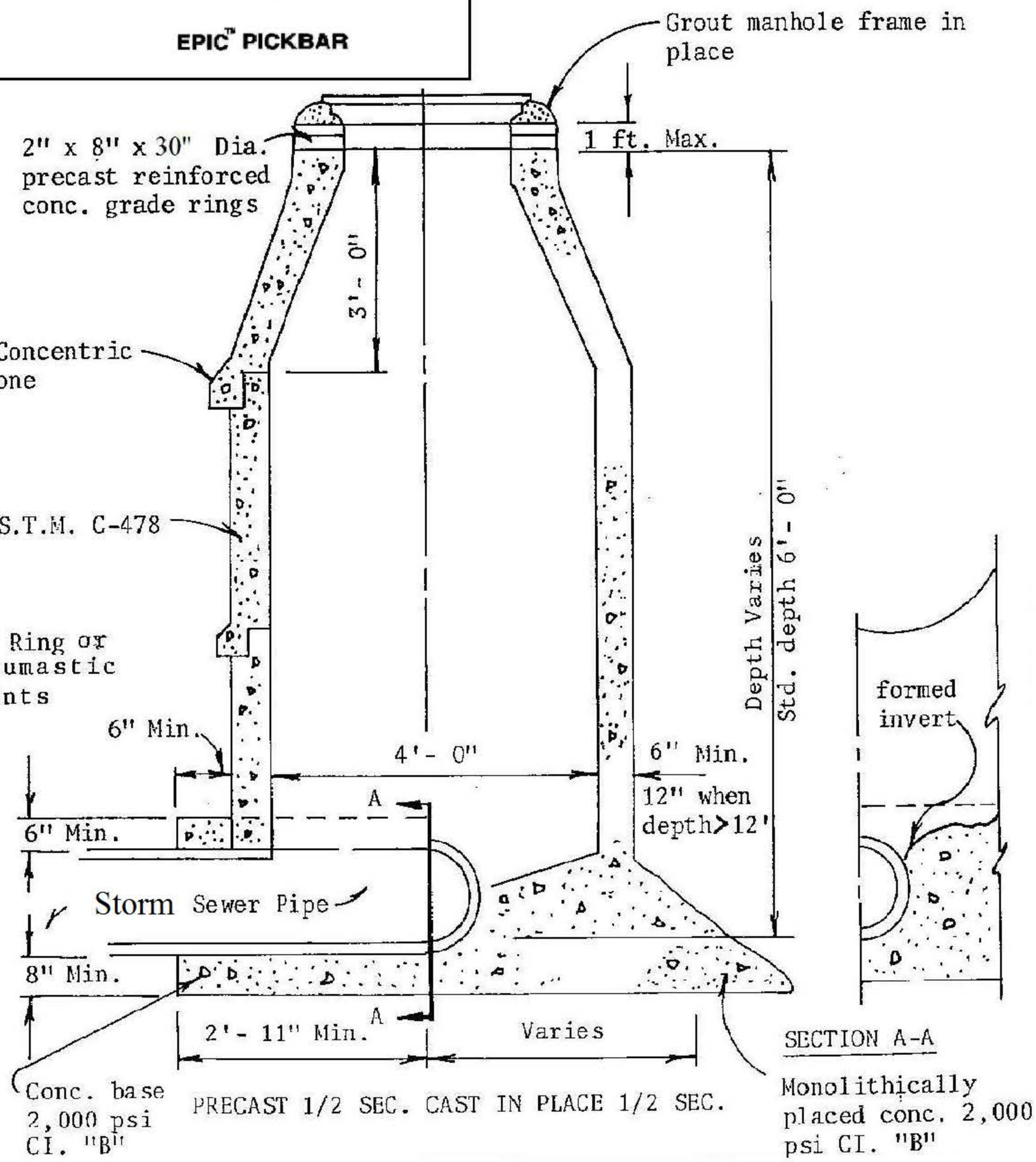

Huntsville Design Criteria	STANDARD STORM SEWER MANHOLE	Scale: NONE
Revisions		FIGURE D -5

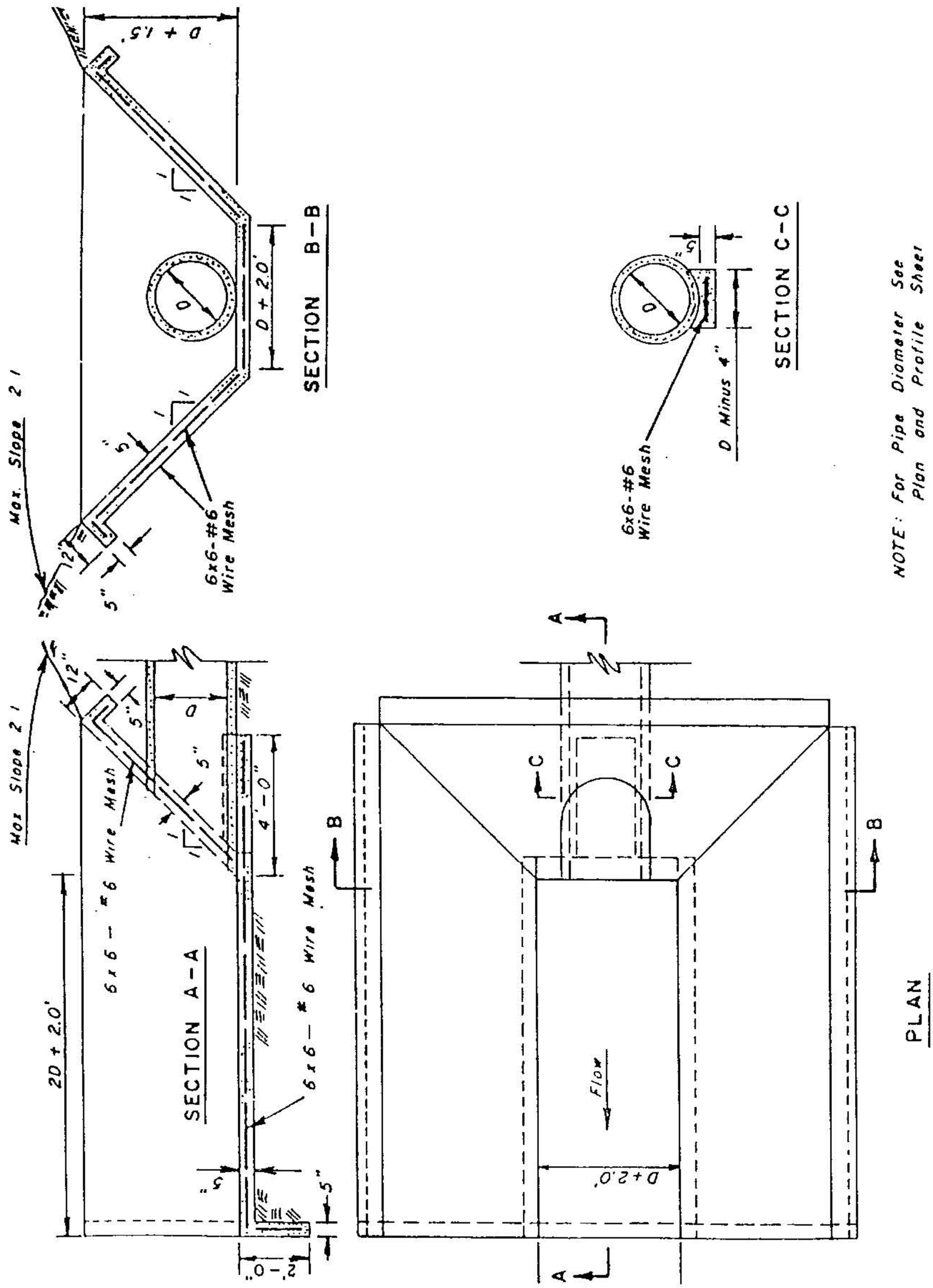

Huntsville Design Criteria	CONCRETE APRON SLOPING HEADWALL	Scale: NONE
Revisions		FIGURE D - 6

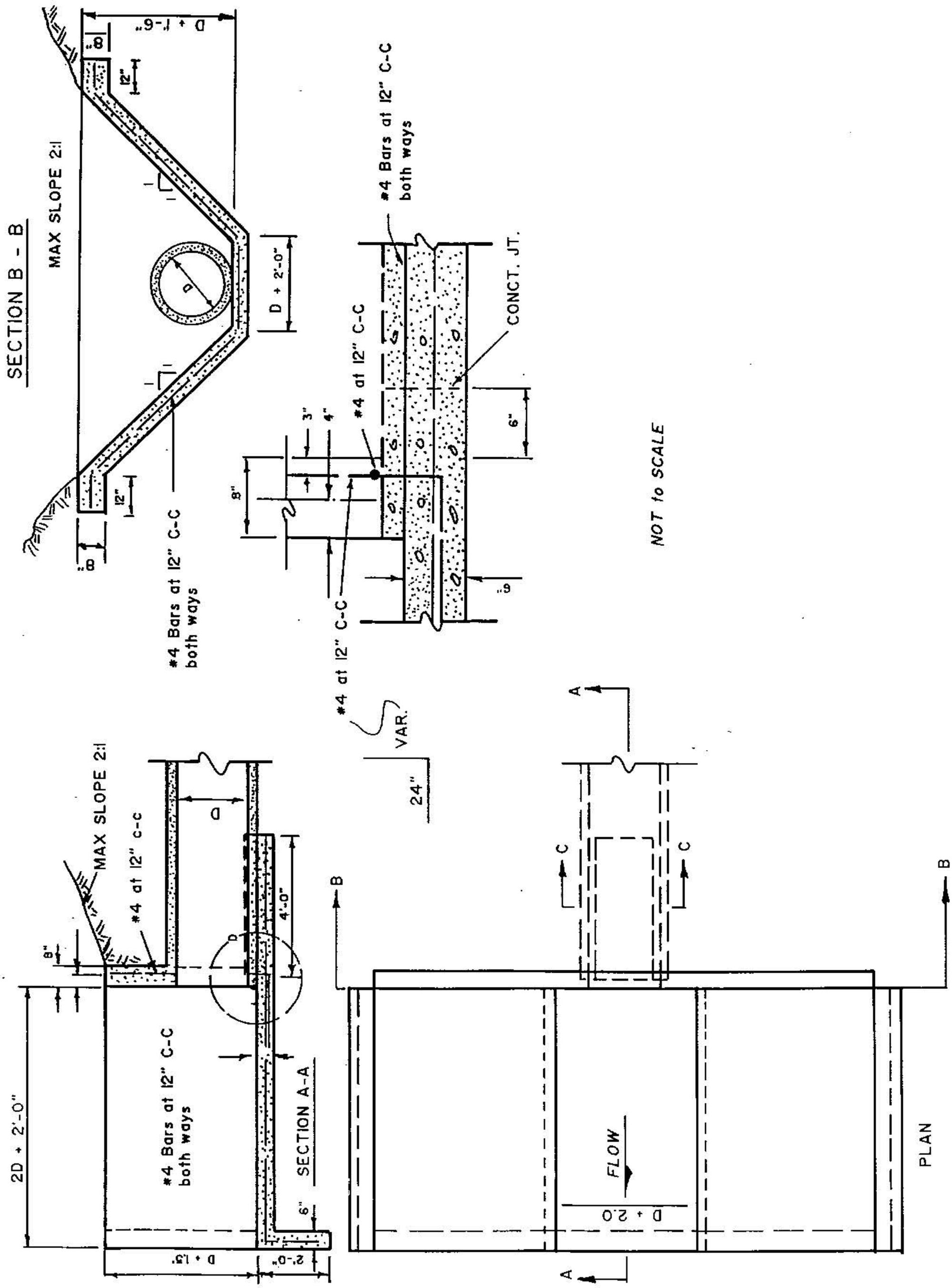

Huntsville Design Criteria	CONCRETE APRON VERTICAL HEADWALL	Scale: NONE
Revisions		FIGURE D -7

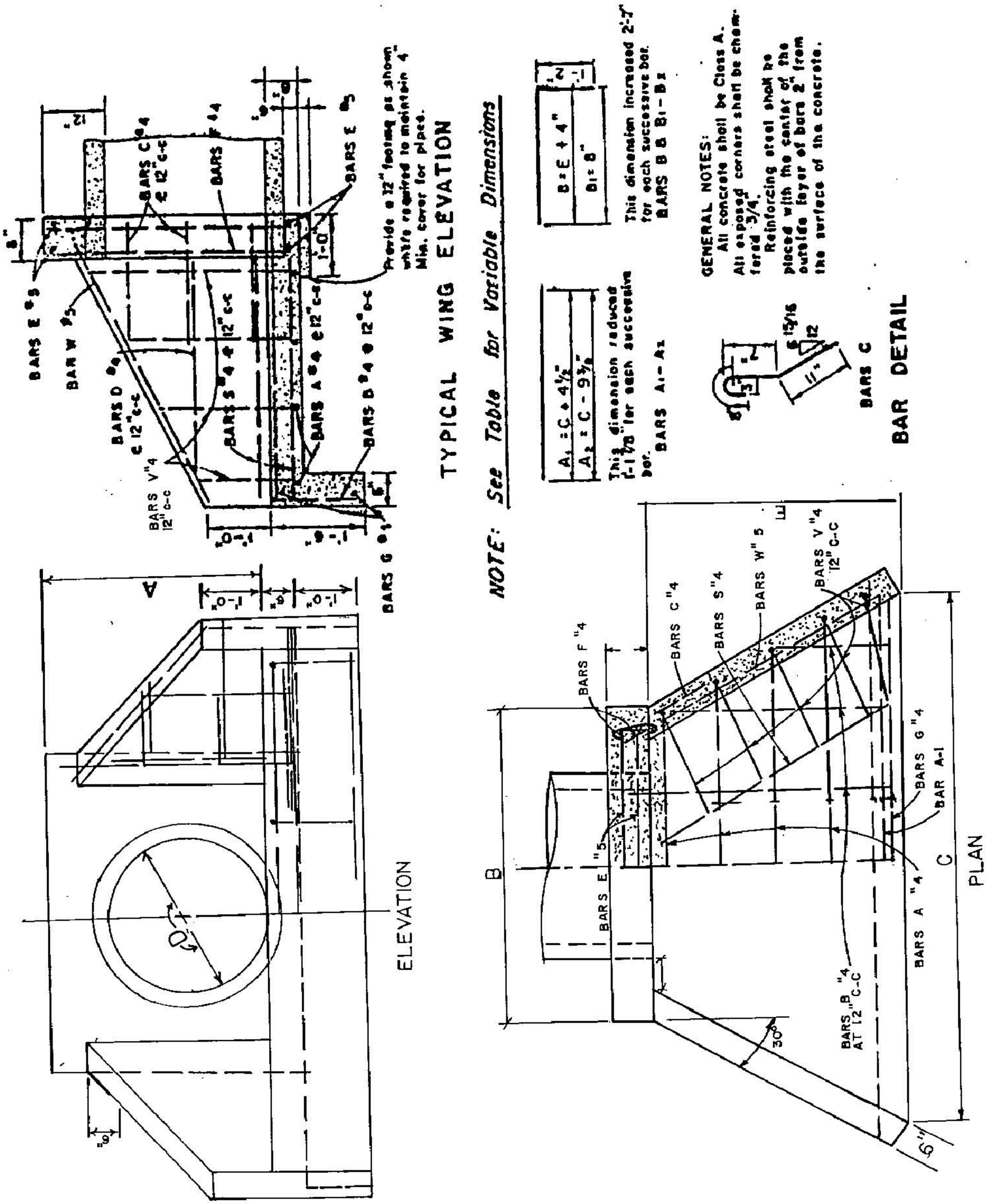

Huntsville Design Criteria	CONCRETE WINGWALL	Scale: NONE
Revisions		FIGURE D - 8

TABLE of DIMENSIONS
for
CONCRETE WINGWALLS

PIPE DIA. SIZE	A	B	C	D	E
18"	2'-6"	4'-0"	4'-0·7/8"	18"	2'-0"
24"	3'-0"	4'-6"	5'-9·3/4"	24"	3'-0"
30"	3'-6"	5'-0"	7'-6·5/8"	30"	4'-0"
36"	4'-0"	6'-0"	9'-3·1/2"	36"	5'-0"
39"	4'-3"	6'-0"	10'-2"	39"	5'-6"
42"	4'-6"	6'-6"	11'-0·1/4"	42"	6'-0"
48"	5'-3"	7'-0"	12'-9·1/8"	48"	7'-0"
54"	5'-9"	7'-6"	14'-6"	54"	8'-0"
60"	6'-3"	8'-0"	16'-2·7/8"	64"	9'-0"
66"	6'-9"	8'-6"	17'-11·3/4"	66"	10'-0"
72"	7'-3"	9'-0"	19'-8·5/8"	72"	11'-0"

Huntsville Design Criteria	CONCRETE WINGWALLS TABLE OF DIMENSIONS	Scale: NONE
Revisions		FIGURE D - 9

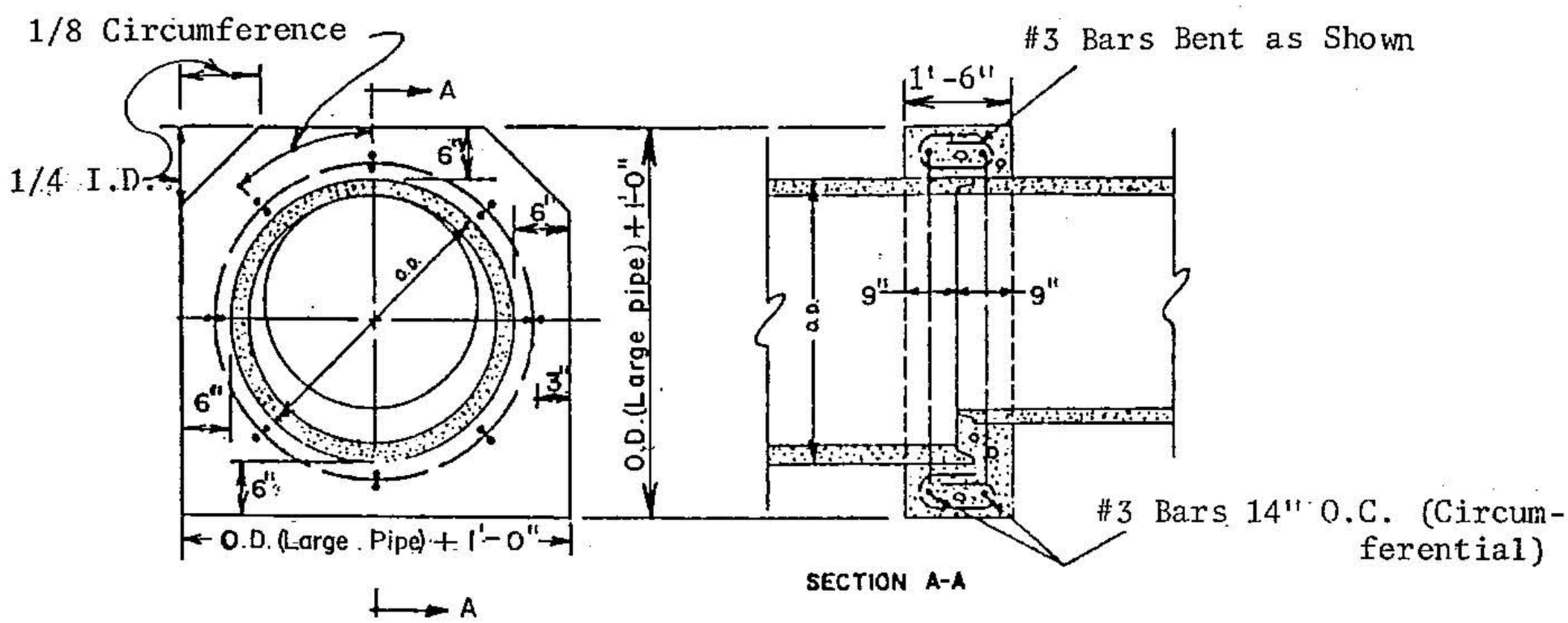

REINFORCED CONCRETE COLLAR

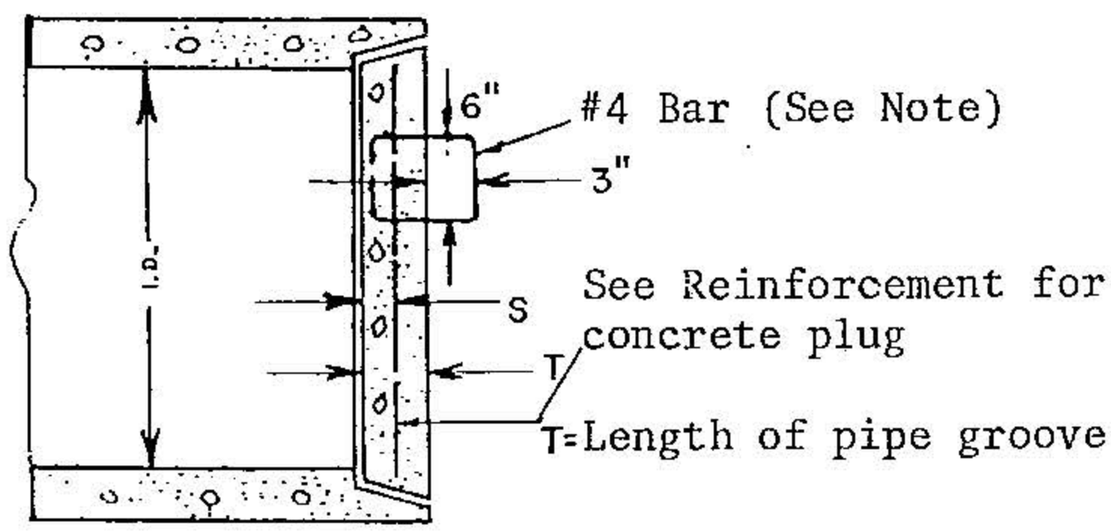

REINFORCED CONCRETE PIPE PLUG

REINFORCEMENT FOR CONC. PLUG

PIPE SIZE	REINF BAR	DISTANCE c-c	S
18"-33"	#2	12" bothways	1/2 T
36"-54"	#3	"	1/3 T
60"-84"	#4	"	1/4 T

NOTE:

Steel handle for reinforced concrete pipe plug shall be located 1/4 I.D. above center point of plug. Two steel handles will be required on plugs of 38" pipes or larger and shall be placed 1/4 I.D. apart and 1/4 I.D. above conter of plug. Concrete to be 2,000 p.s.i. Class B.

Huntsville Design Criteria	REINFORCED CONCRETE COLLAR AND MISCELLANEOUS DETAILS	Scale: NONE
Revisions		FIGURE D - 10

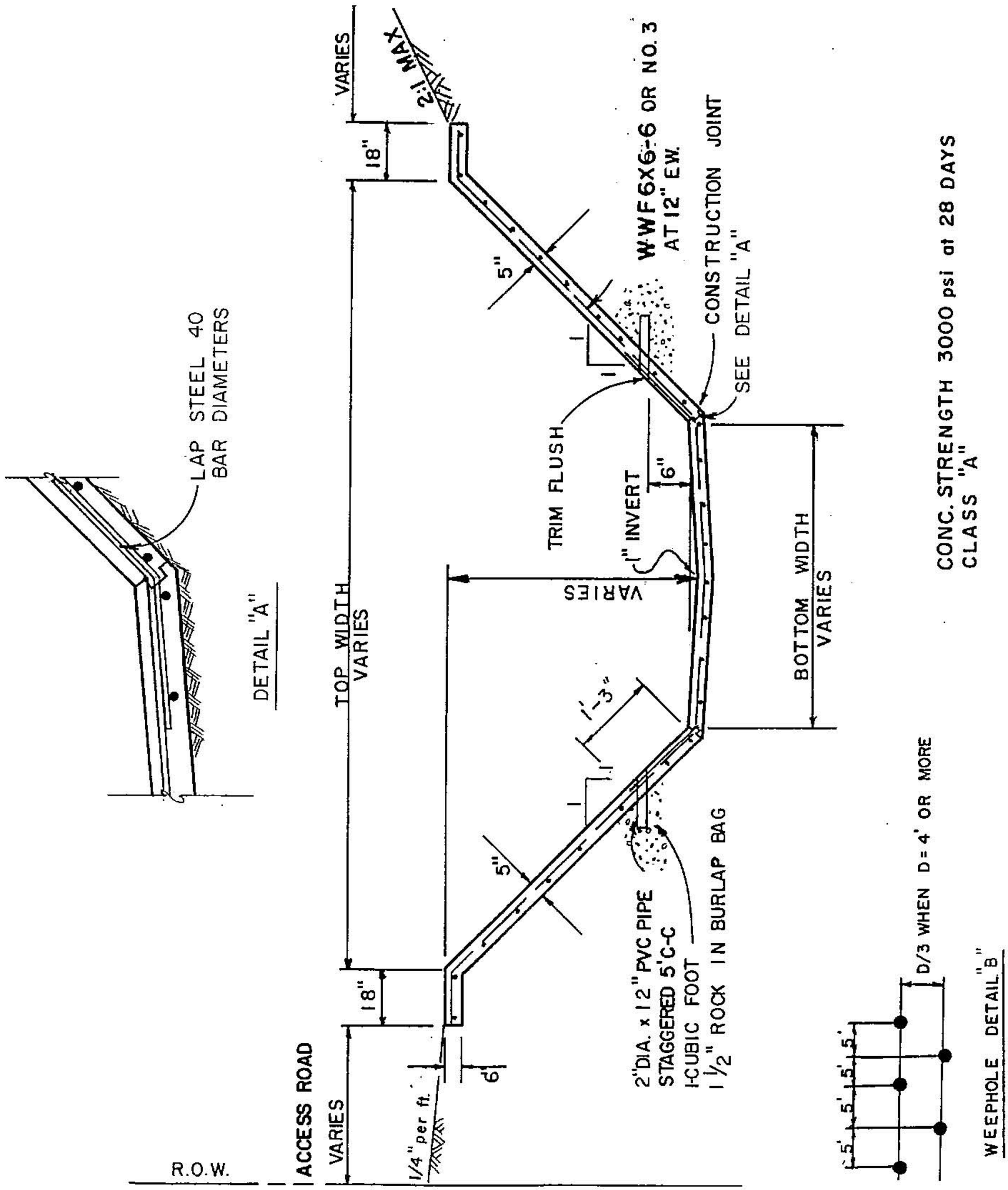

Huntsville Design Criteria	TYPICAL SECTION CONCRETE LINED CHANNEL	Scale: NONE
Revisions		FIGURE **D - 11**

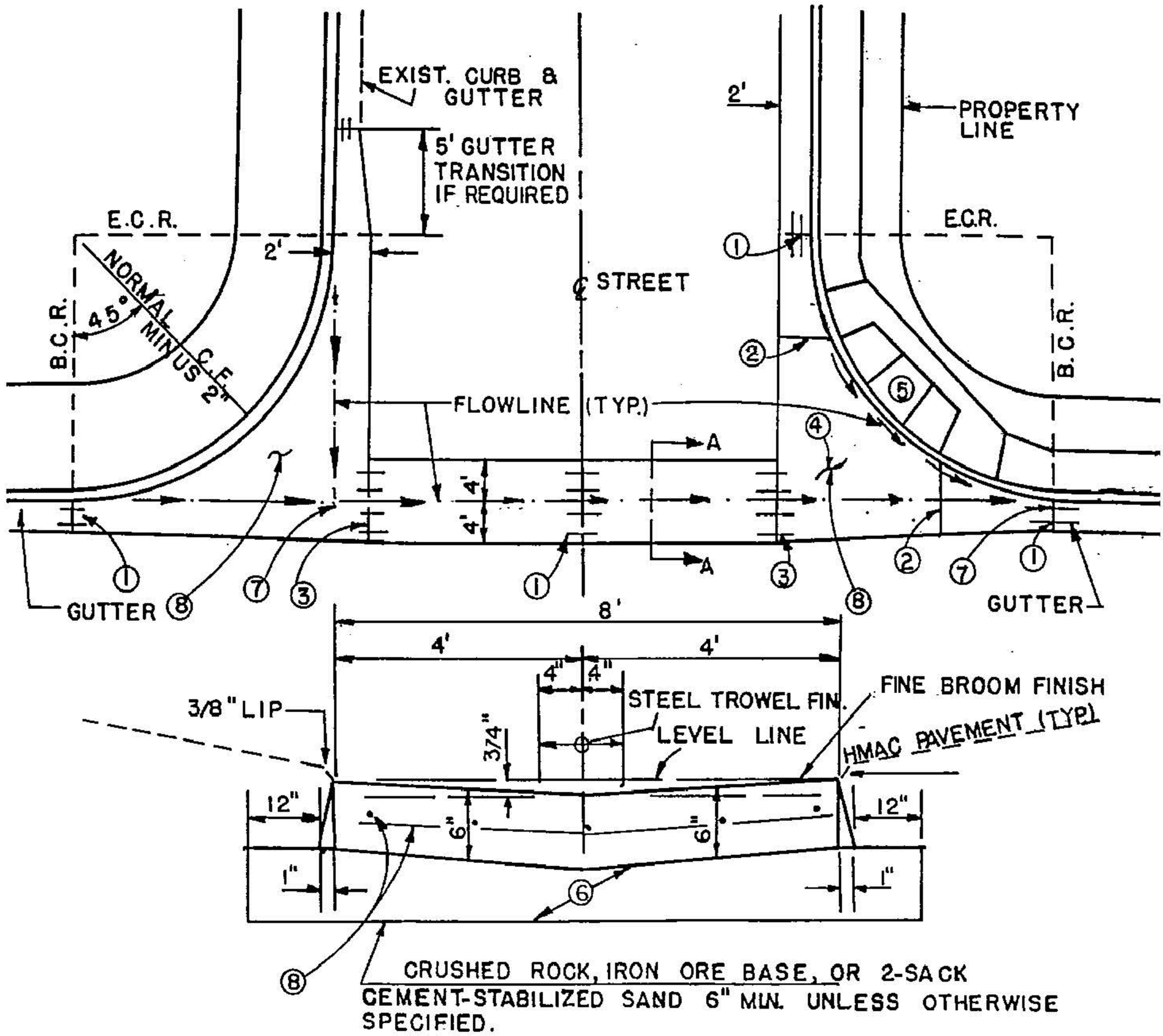

SECTION A-A

NOTES:

1. 1/2" EXPANSION JOINT (TYPICAL) WITH SMOOTH DOWELS, NO. 4, 18" LENGTH, ONE END COATED.
2. CONTRACTION JOINT (MIN. DEPTH 1.5").
3. COLD JOINT, WITH SMOOTH DOWELS, NO. 4, 18" LENGTH.
4. 6" CLASS "A" CONCRETE, CURED WITH WHITE PIGMENTED COMPOUND.
5. RAMP FOR PHYSICALLY HANDICAPPED (WHEN REQUIRED).
6. BASE SHALL EXTEND A MIN. OF 12" OUTSIDE AREA ENCLOSED BY CURB RETURN, SPANDREL AND VALLEY GUTTER.
7. ALL FLOW-LINE PI's SHALL BE LOCATED BY SURVEY & GRADE-STAKED PRIOR TO PLACING OF CONCRETE.
8. NO. 4 REINFORCING STEEL, 12" O.C., BOTH WAYS.

Huntsville Design Criteria	CONCRETE VALLEY GUTTER AND SPANDREL	Scale: NONE
Revisions		FIGURE D - 12

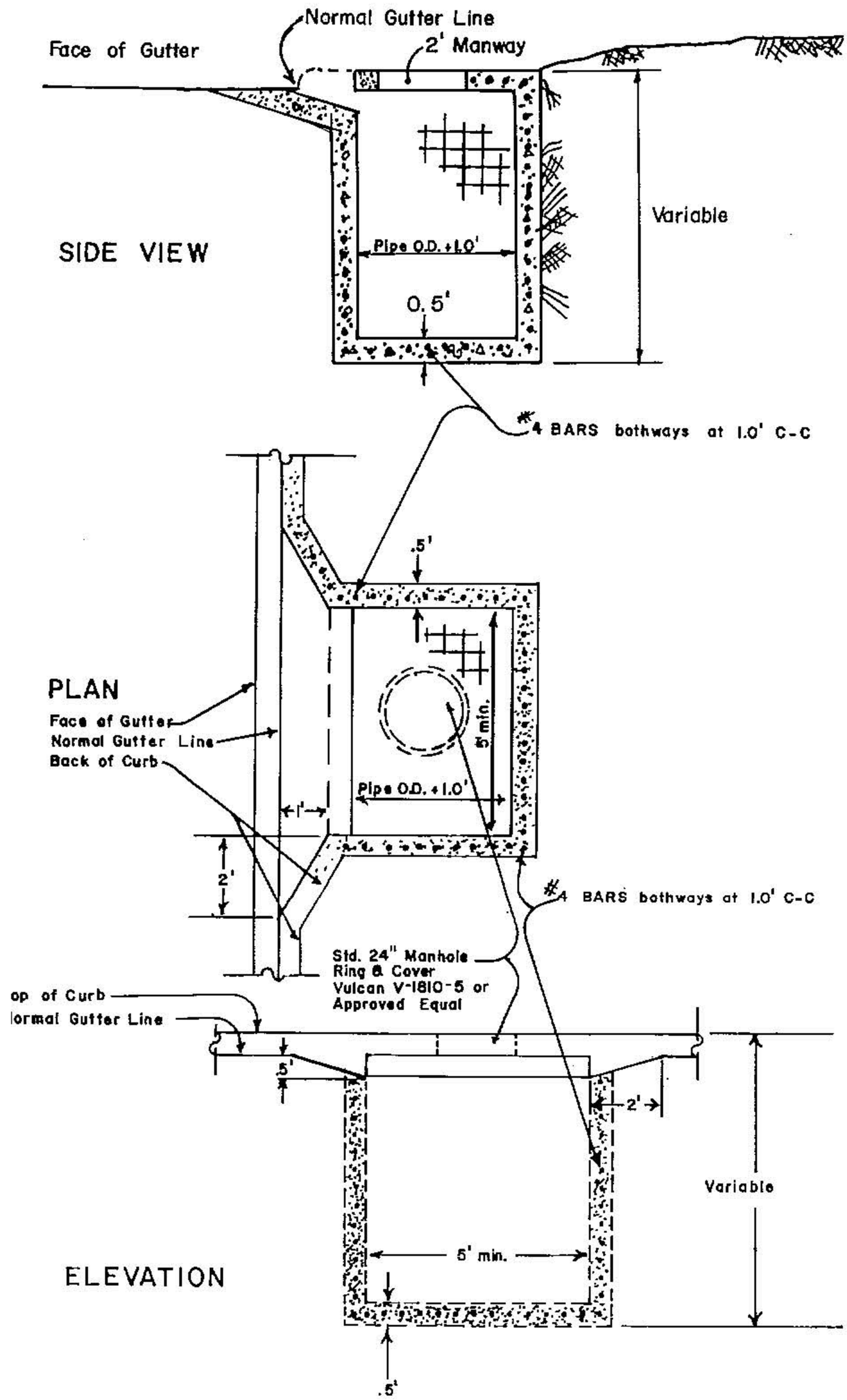

Huntsville Design Criteria	TYPICAL RECESSED INLET DETAILS	Scale: NONE
Revisions		FIGURE **D - 13**